BID #1903888F
Designed in Burlington, WA

ENVISION NW Floors

Roof

Reviewed for code compliance
with IRC 2015
Kitsap County Building Department
lasmith@co.kitsap.wa.us
11/16/2020

BASIC PERMIT PACKAGE
REVIEWED FOR CODE COMPLIANCE
WITH IRC 2015
KITSAP COUNTY BUILDING DEPARTMENT

7/12/2019

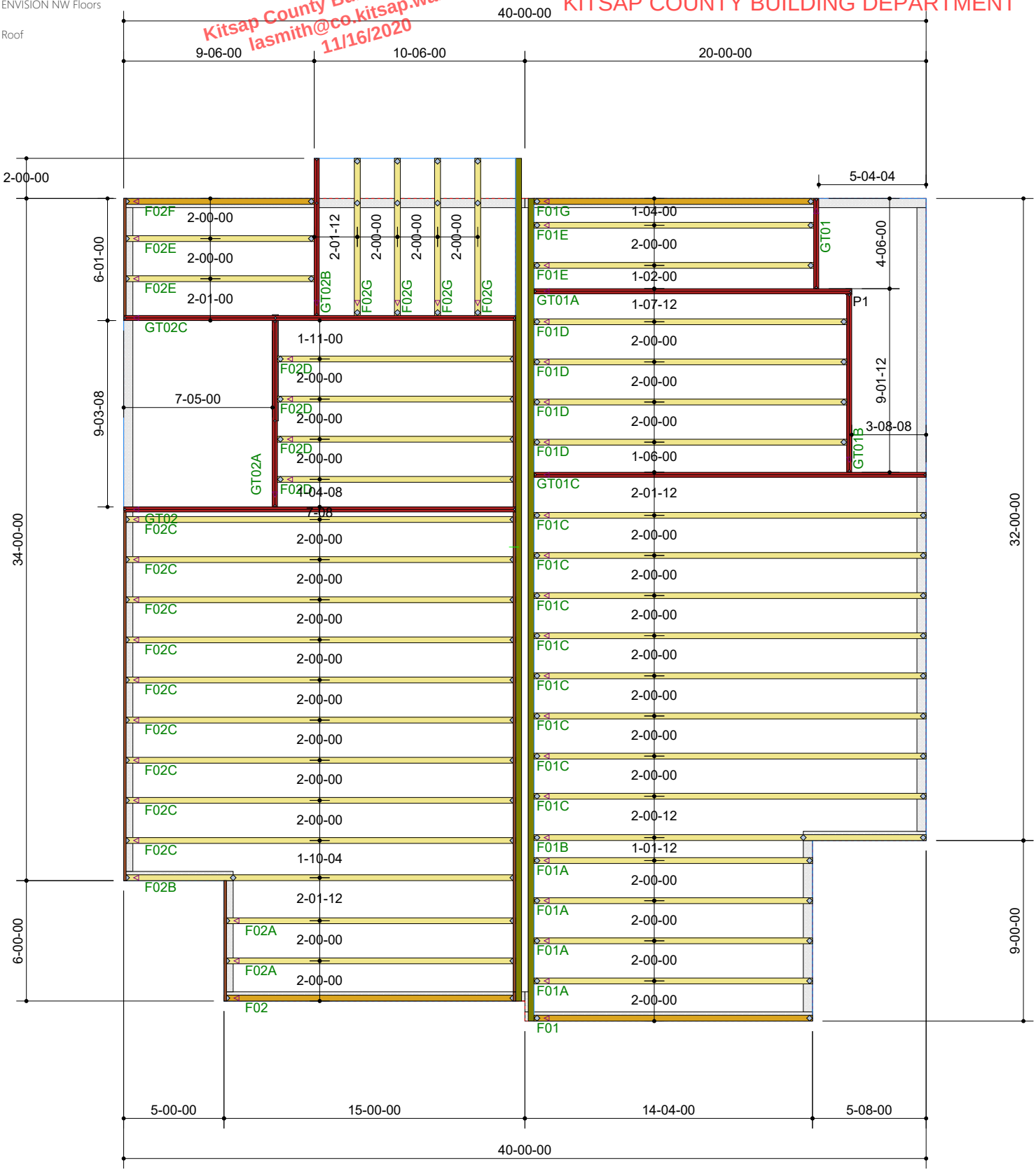

BID #1903888F ENVISION NW SILVERDALE, WA 98383-9521	Sales: Jeremiah Murphy

LOUWS TRUSS INCORPORATED

Depth: *16-00* Spacing: *24"*

Established Basic Permit #
19-03671

Permit Number: 20-04896

Job	Truss	Truss Type	Qty	Ply	ENVISION NW
1903888F	F01	Floor Supported Gable	1	1	Job Reference (optional)

Louws Truss, Inc., Ferndale, WA 98248

8.310 s Jun 26 2019 MiTek Industries, Inc. Fri Jul 12 12:33:11 2019 Page 1

ID:t9rACx?uLBlNQU_rXimwntyz1pO-OMlKyWL63EqW0d66?uRr3HDFpdiuEjdN1mHkYayynK6

0-1-8

Scale = 1:22.8

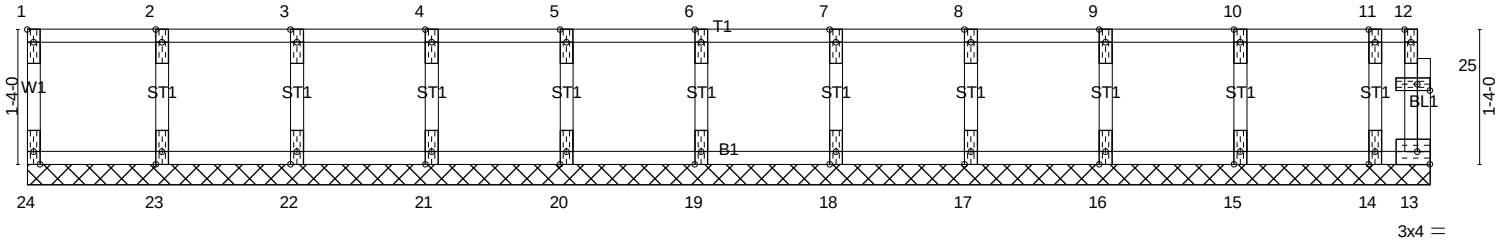

0-3-8 | 13-7-0 | 13-10-8
0-3-8 | 13-3-8 | 0-3-8

Plate Offsets (X,Y)-- [1:Edge,0-0-12], [25:0-1-8,0-0-12]

LOADING (psf)		**SPACING-**	2-0-0	**CSI.**		**DEFL.**	in	(loc)	l/defl	L/d	**PLATES**	**GRIP**
TCLL	40.0	Plate Grip DOL	1.00	TC	0.07	Vert(LL)	n/a	-	n/a	999	MT20	220/195
TCDL	10.0	Lumber DOL	1.00	BC	0.02	Vert(CT)	n/a	-	n/a	999		
BCLL	0.0	Rep Stress Incr	YES	WB	0.02	Horz(CT)	0.00	13	n/a	n/a		
BCDL	5.0	Code IRC2015/TPI2014		Matrix-R							Weight: 56 lb	FT = 20%F, 11%E

LUMBER-
TOP CHORD 2x4 DF No.2(flat)
BOT CHORD 2x4 DF No.2(flat)
WEBS 2x4 DF No.2(flat)
OTHERS 2x4 DF No.2(flat)

BRACING-
TOP CHORD Structural wood sheathing directly applied or 6-0-0 oc purlins, except end verticals.
BOT CHORD Rigid ceiling directly applied or 10-0-0 oc bracing.

REACTIONS. All bearings 13-10-8.
(lb) - Max Grav All reactions 250 lb or less at joint(s) 24, 13, 23, 22, 21, 20, 19, 18, 17, 16, 15, 14

FORCES. (lb) - Max. Comp./Max. Ten. - All forces 250 (lb) or less except when shown.

NOTES-
1) All plates are 1.5x4 MT20 unless otherwise indicated.
2) Gable requires continuous bottom chord bearing.
3) Truss to be fully sheathed from one face or securely braced against lateral movement (i.e. diagonal web).
4) Gable studs spaced at 1-4-0 oc.
5) This truss is designed in accordance with the 2015 International Residential Code sections R502.11.1 and R802.10.2 and referenced standard ANSI/TPI 1.
6) Recommend 2x6 strongbacks, on edge, spaced at 10-0-0 oc and fastened to each truss with 3-10d (0.131" X 3") nails. Strongbacks to be attached to walls at their outer ends or restrained by other means.
7) CAUTION, Do not erect truss backwards.

LOAD CASE(S) Standard

Established Basic Permit #

19-03671

Permit Number: 20-04896

Job	Truss	Truss Type	Qty	Ply	ENVISION NW
1903888F	F01A	Floor	4	1	Job Reference (optional)

Louws Truss, Inc., Ferndale, WA 98248

8.310 s Jun 26 2019 MiTek Industries, Inc. Fri Jul 12 12:33:13 2019 Page 1

ID:t9rACx?uLBlNQU_rXimwntyz1pO-Kkt4NCMMbr4EGxGV6JUJ8iIVuRDViaRgV4mrcTyynK4

2-5-4 | 0-11-4 | 0-1-8

Scale = 1:23.4

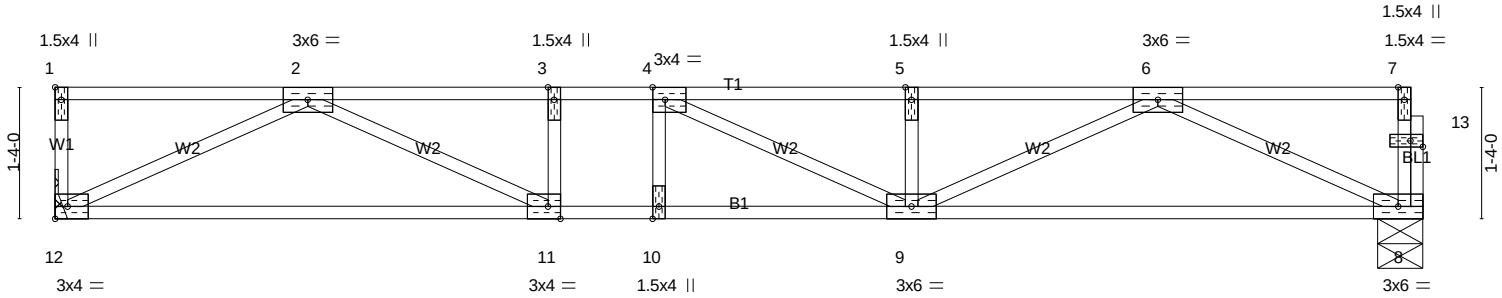

0-3-8	5-1-8	5-7-2	6-0-12	13-7-0	13-10-8
0-3-8	4-10-0	0-5-10	0-5-10	7-6-4	0-3-8

Plate Offsets (X,Y)-- [1:Edge,0-0-12], [4:0-1-8,Edge], [11:0-1-8,Edge], [13:0-1-8,0-0-12]

LOADING (psf)		**SPACING-**	2-0-0	**CSI.**		**DEFL.**	in	(loc)	l/defl	L/d	**PLATES**	**GRIP**
TCLL	40.0	Plate Grip DOL	1.00	TC	0.48	Vert(LL)	-0.12	9-10	>999	480	MT20	220/195
TCDL	10.0	Lumber DOL	1.00	BC	0.71	Vert(CT)	-0.16	9-10	>999	360		
BCLL	0.0	Rep Stress Incr	YES	WB	0.25	Horz(CT)	0.03	8	n/a	n/a		
BCDL	5.0	Code IRC2015/TPI2014		Matrix-SH							Weight: 64 lb	FT = 20%F, 11%E

LUMBER-
TOP CHORD 2x4 DF No.2(flat)
BOT CHORD 2x4 DF No.2(flat)
WEBS 2x4 DF No.2(flat)

BRACING-
TOP CHORD Structural wood sheathing directly applied or 6-0-0 oc purlins, except end verticals.
BOT CHORD Rigid ceiling directly applied or 10-0-0 oc bracing.

REACTIONS. (lb/size) 8=747/0-5-8 (min. 0-1-8), 12=753/Mechanical

FORCES. (lb) - Max. Comp./Max. Ten. - All forces 250 (lb) or less except when shown.
TOP CHORD 2-3=-2062/0, 3-4=-2062/0, 4-5=-2056/0, 5-6=-2056/0
BOT CHORD 11-12=0/1312, 10-11=0/2062, 9-10=0/2062, 8-9=0/1329
WEBS 6-8=-1464/0, 2-12=-1457/0, 6-9=0/808, 2-11=0/844, 5-9=-295/0, 4-9=-305/223

NOTES-
1) Unbalanced floor live loads have been considered for this design.
2) Refer to girder(s) for truss to truss connections.
3) This truss is designed in accordance with the 2015 International Residential Code sections R502.11.1 and R802.10.2 and referenced standard ANSI/TPI 1.
4) Recommend 2x6 strongbacks, on edge, spaced at 10-0-0 oc and fastened to each truss with 3-10d (0.131" X 3") nails. Strongbacks to be attached to walls at their outer ends or restrained by other means.
5) CAUTION, Do not erect truss backwards.

LOAD CASE(S) Standard

Established Basic Permit #

19-03671

Permit Number: 20-04896

Job	Truss	Truss Type	Qty	Ply	ENVISION NW
1903888F	F01B	Floor	1	1	Job Reference (optional)

Louws Truss, Inc., Ferndale, WA 98248

8.310 s Jun 26 2019 MiTek Industries, Inc. Fri Jul 12 12:33:16 2019 Page 1

ID:t9rACx?uLBlNQU_rXimwntyz1pO-kJYD?EPFtmTp7O?3nR10mKw0yeHivws6B1?VDoyynK1

2-5-4 | 0-8-12 | 0-7-8 | 0-1-8

Scale = 1:32.3

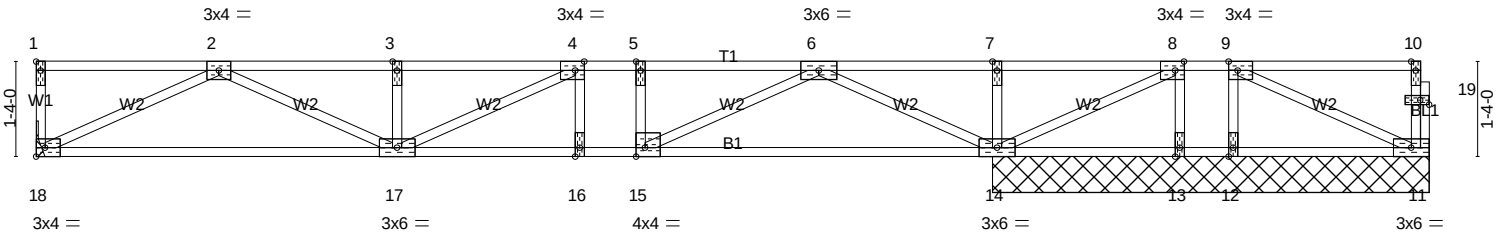

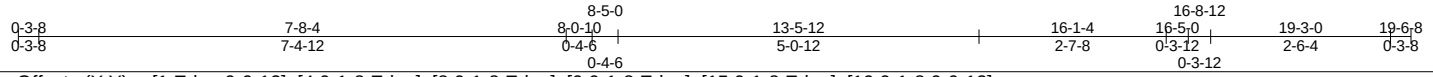

Plate Offsets (X,Y)-- [1:Edge,0-0-12], [4:0-1-8,Edge], [8:0-1-8,Edge], [9:0-1-8,Edge], [15:0-1-8,Edge], [19:0-1-8,0-0-12]

LOADING (psf)		**SPACING-**	2-0-0	**CSI.**		**DEFL.**	in	(loc)	l/defl	L/d	**PLATES**	**GRIP**
TCLL	40.0	Plate Grip DOL	1.00	TC	0.49	Vert(LL)	-0.10	16-17	>999	480	MT20	220/195
TCDL	10.0	Lumber DOL	1.00	BC	0.62	Vert(CT)	-0.13	16-17	>999	360		
BCLL	0.0	Rep Stress Incr	YES	WB	0.27	Horz(CT)	0.02	14	n/a	n/a		
BCDL	5.0	Code IRC2015/TPI2014		Matrix-SH							Weight: 91 lb	FT = 20%F, 11%E

LUMBER-
TOP CHORD 2x4 DF No.2(flat)
BOT CHORD 2x4 DF No.2(flat)
WEBS 2x4 DF No.2(flat)

BRACING-
TOP CHORD Structural wood sheathing directly applied or 6-0-0 oc purlins, except end verticals.
BOT CHORD Rigid ceiling directly applied or 6-0-0 oc bracing.

REACTIONS. All bearings 6-1-8 except (jt=length) 18=Mechanical.
(lb) - Max Uplift All uplift 100 lb or less at joint(s) 11 except 13=-350(LC 3)
Max Grav All reactions 250 lb or less at joint(s) 11, 13 except 14=1342(LC 1), 18=644(LC 3), 12=368(LC 1)

FORCES. (lb) - Max. Comp./Max. Ten. - All forces 250 (lb) or less except when shown.
TOP CHORD 2-3=-1603/0, 3-4=-1603/0, 4-5=-1370/0, 5-6=-1370/0, 6-7=0/990, 7-8=0/990, 8-9=0/258
BOT CHORD 17-18=0/1082, 16-17=0/1370, 15-16=0/1370, 14-15=0/432, 13-14=-258/0, 12-13=-258/0, 11-12=-258/0
WEBS 7-14=-281/0, 2-18=-1202/0, 6-14=-1580/0, 2-17=0/579, 6-15=0/1052, 3-17=-295/0, 5-15=-304/0, 4-17=-82/384, 9-11=0/286, 8-14=-817/0, 8-13=-43/354, 9-12=-341/0

NOTES-
1) Unbalanced floor live loads have been considered for this design.
2) All plates are 1.5x4 MT20 unless otherwise indicated.
3) Refer to girder(s) for truss to truss connections.
4) Provide mechanical connection (by others) of truss to bearing plate capable of withstanding 100 lb uplift at joint(s) 11 except (jt=lb) 13=350.
5) This truss is designed in accordance with the 2015 International Residential Code sections R502.11.1 and R802.10.2 and referenced standard ANSI/TPI 1.
6) Recommend 2x6 strongbacks, on edge, spaced at 10-0-0 oc and fastened to each truss with 3-10d (0.131" X 3") nails. Strongbacks to be attached to walls at their outer ends or restrained by other means.
7) CAUTION, Do not erect truss backwards.

LOAD CASE(S) Standard

Established Basic Permit #

19-03671

Permit Number: 20-04896

Job	Truss	Truss Type	Qty	Ply	ENVISION NW
1903888F	F01C	Floor	8	1	Job Reference (optional)

Louws Truss, Inc., Ferndale, WA 98248

8.310 s Jun 26 2019 MiTek Industries, Inc. Fri Jul 12 12:33:18 2019 Page 1

ID:t9rACx?uLBlNQU_rXimwntyz1pO-gigzQwQVPOjWMi8Svs3Url?FVSxGNogPeLUcHgyynK?

2-5-4 1-7-4 0-1-8

Scale = 1:33.1

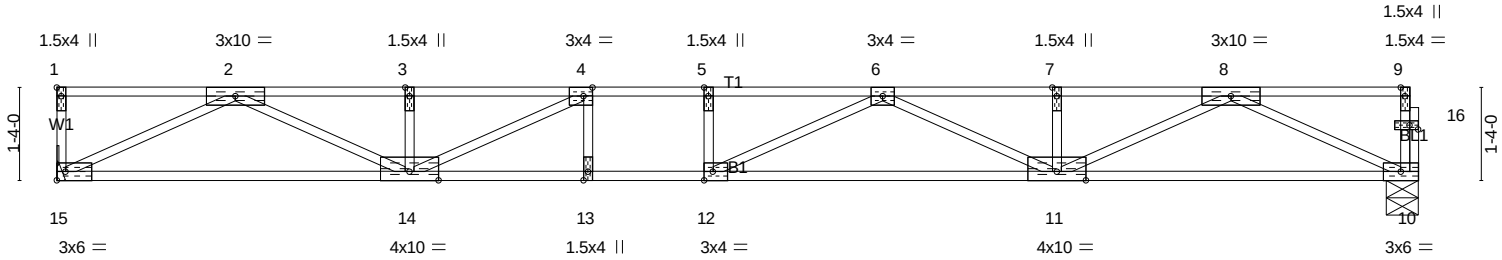

0-3-8	7-8-4	8-5-14	9-3-8	19-3-0	19-6-8
0-3-8	7-4-12	0-9-10	0-9-10	9-11-8	0-3-8

Plate Offsets (X,Y)-- [1:Edge,0-0-12], [4:0-1-8,Edge], [12:0-1-8,Edge], [16:0-1-8,0-0-12]

LOADING (psf)		**SPACING-**	2-0-0	**CSI.**		**DEFL.**	in	(loc)	l/defl	L/d	**PLATES**	**GRIP**
TCLL	40.0	Plate Grip DOL	1.00	TC	0.87	Vert(LL)	-0.37	11-12	>619	480	MT20	220/195
TCDL	10.0	Lumber DOL	1.00	BC	0.67	Vert(CT)	-0.53	11-12	>438	360		
BCLL	0.0	Rep Stress Incr	YES	WB	0.38	Horz(CT)	0.07	10	n/a	n/a		
BCDL	5.0	Code IRC2015/TPI2014		Matrix-SH							Weight: 88 lb	FT = 20%F, 11%E

LUMBER-
TOP CHORD 2x4 DF No.2(flat)
BOT CHORD 2x4 DF 2400F 2.0E(flat)
WEBS 2x4 DF No.2(flat)

BRACING-
TOP CHORD Structural wood sheathing directly applied or 2-2-0 oc purlins, except end verticals.
BOT CHORD Rigid ceiling directly applied or 10-0-0 oc bracing.

REACTIONS. (lb/size) 10=1058/0-5-8 (min. 0-1-8), 15=1064/Mechanical

FORCES. (lb) - Max. Comp./Max. Ten. - All forces 250 (lb) or less except when shown.
TOP CHORD 2-3=-3291/0, 3-4=-3291/0, 4-5=-4185/0, 5-6=-4185/0, 6-7=-3345/0, 7-8=-3345/0
BOT CHORD 14-15=0/1946, 13-14=0/4185, 12-13=0/4185, 11-12=0/4082, 10-11=0/1997
WEBS 8-10=-2202/0, 2-15=-2162/0, 8-11=0/1498, 2-14=0/1494, 3-14=-271/31, 6-11=-818/0, 4-14=-1179/0, 6-12=-248/548

NOTES-
1) Unbalanced floor live loads have been considered for this design.
2) Refer to girder(s) for truss to truss connections.
3) This truss is designed in accordance with the 2015 International Residential Code sections R502.11.1 and R802.10.2 and referenced standard ANSI/TPI 1.
4) Recommend 2x6 strongbacks, on edge, spaced at 10-0-0 oc and fastened to each truss with 3-10d (0.131" X 3") nails. Strongbacks to be attached to walls at their outer ends or restrained by other means.
5) CAUTION, Do not erect truss backwards.

LOAD CASE(S) Standard

Established Basic Permit #

19-03671

Permit Number: 20-04896

Job	Truss	Truss Type	Qty	Ply	ENVISION NW
1903888F	F01D	Floor	4	1	Job Reference (optional)

Louws Truss, Inc., Ferndale, WA 98248

8.310 s Jun 26 2019 MiTek Industries, Inc. Fri Jul 12 12:33:21 2019 Page 1
ID:t9rACx?uLBlNQU_rXimwntyz1pO-5HM62xSNiJ55D9t1a_dBTOduFf_laAssKJiGt?yynJy

2-5-4 0-2-8

Scale = 1:26.5

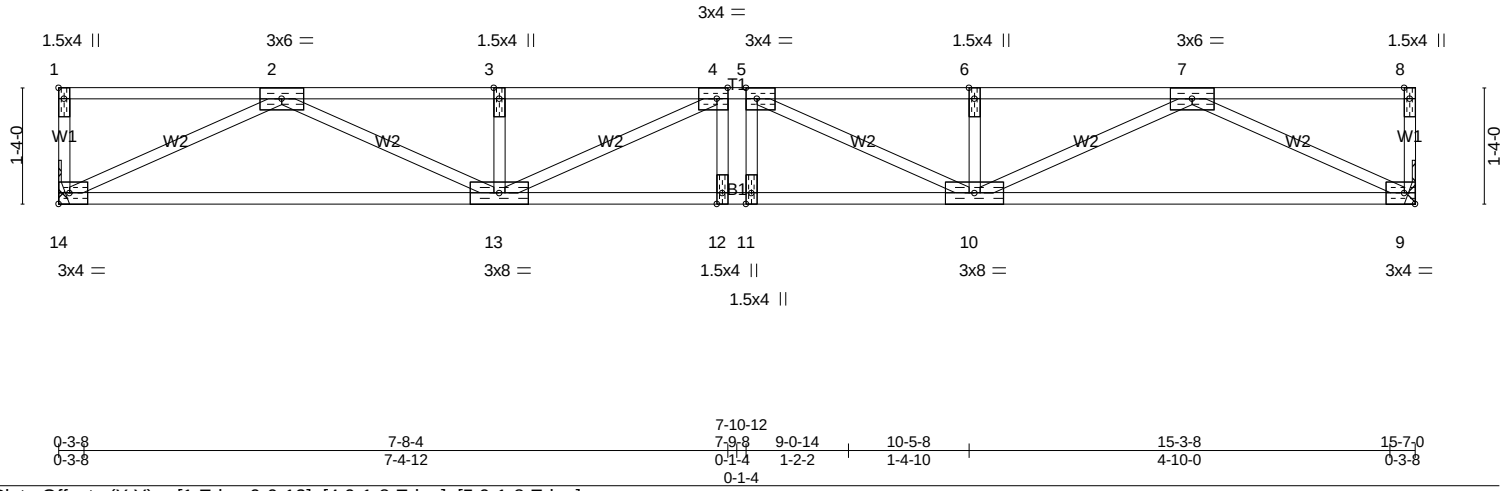

Plate Offsets (X,Y)-- [1:Edge,0-0-12], [4:0-1-8,Edge], [5:0-1-8,Edge]

LOADING (psf)		**SPACING-**	2-0-0	**CSI.**		**DEFL.**	in	(loc)	l/defl	L/d	**PLATES**	**GRIP**
TCLL	40.0	Plate Grip DOL	1.00	TC	0.32	Vert(LL)	-0.14	12	>999	480	MT20	220/195
TCDL	10.0	Lumber DOL	1.00	BC	0.62	Vert(CT)	-0.19	12	>956	360		
BCLL	0.0	Rep Stress Incr	YES	WB	0.29	Horz(CT)	0.04	9	n/a	n/a		
BCDL	5.0	Code IRC2015/TPI2014		Matrix-SH							Weight: 73 lb	FT = 20%F, 11%E

LUMBER-
TOP CHORD 2x4 DF No.2(flat)
BOT CHORD 2x4 DF No.2(flat)
WEBS 2x4 DF No.2(flat)

BRACING-
TOP CHORD Structural wood sheathing directly applied or 6-0-0 oc purlins, except end verticals.
BOT CHORD Rigid ceiling directly applied or 10-0-0 oc bracing.

REACTIONS. (lb/size) 9=850/Mechanical, 14=850/Mechanical

FORCES. (lb) - Max. Comp./Max. Ten. - All forces 250 (lb) or less except when shown.
TOP CHORD 2-3=-2432/0, 3-4=-2432/0, 4-5=-2743/0, 5-6=-2432/0, 6-7=-2432/0
BOT CHORD 13-14=0/1506, 12-13=0/2743, 11-12=0/2743, 10-11=0/2743, 9-10=0/1506
WEBS 7-9=-1673/0, 2-14=-1673/0, 7-10=0/1028, 2-13=0/1028, 6-10=-262/0, 3-13=-262/0, 5-10=-501/49, 4-13=-501/49

NOTES-
1) Unbalanced floor live loads have been considered for this design.
2) Refer to girder(s) for truss to truss connections.
3) This truss is designed in accordance with the 2015 International Residential Code sections R502.11.1 and R802.10.2 and referenced standard ANSI/TPI 1.
4) Recommend 2x6 strongbacks, on edge, spaced at 10-0-0 oc and fastened to each truss with 3-10d (0.131" X 3") nails. Strongbacks to be attached to walls at their outer ends or restrained by other means.

LOAD CASE(S) Standard

Established Basic Permit #
19-03671

Permit Number: 20-04896

Job	Truss	Truss Type	Qty	Ply	ENVISION NW
1903888F	F01E	Floor	2	1	Job Reference (optional)

Louws Truss, Inc., Ferndale, WA 98248

8.310 s Jun 26 2019 MiTek Industries, Inc. Fri Jul 12 12:33:24 2019 Page 1

ID:t9rACx?uLBlNQU_rXimwntyz1pO-Vs1EgzVG?ETg4dccF7Au40FMXszCnY8I0HxwUKyynJv

2-5-4 1-1-8

Scale = 1:23.6

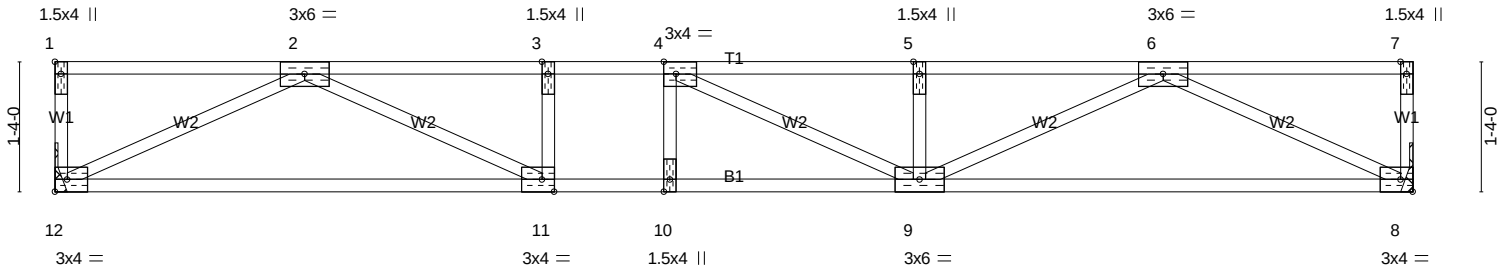

0-3-8	5-1-8	5-8-4	6-3-0	13-7-12	13-11-4
0-3-8	4-10-0	0-6-12	0-6-12	7-4-12	0-3-8

Plate Offsets (X,Y)-- [1:Edge,0-0-12], [4:0-1-8,Edge], [11:0-1-8,Edge]

LOADING (psf)		**SPACING-**	2-0-0	**CSI.**		**DEFL.**	in	(loc)	l/defl	L/d	**PLATES**	**GRIP**
TCLL	40.0	Plate Grip DOL	1.00	TC	0.51	Vert(LL)	-0.14	9-10	>999	480	MT20	220/195
TCDL	10.0	Lumber DOL	1.00	BC	0.77	Vert(CT)	-0.18	9-10	>919	360		
BCLL	0.0	Rep Stress Incr	YES	WB	0.25	Horz(CT)	0.03	8	n/a	n/a		
BCDL	5.0	Code IRC2015/TPI2014		Matrix-SH							Weight: 63 lb	FT = 20%F, 11%E

LUMBER-
TOP CHORD 2x4 DF No.2(flat)
BOT CHORD 2x4 DF No.2(flat)
WEBS 2x4 DF No.2(flat)

BRACING-
TOP CHORD Structural wood sheathing directly applied or 6-0-0 oc purlins, except end verticals.
BOT CHORD Rigid ceiling directly applied or 10-0-0 oc bracing.

REACTIONS. (lb/size) 8=760/Mechanical, 12=760/Mechanical

FORCES. (lb) - Max. Comp./Max. Ten. - All forces 250 (lb) or less except when shown.
TOP CHORD 2-3=-2099/0, 3-4=-2099/0, 4-5=-2076/0, 5-6=-2076/0
BOT CHORD 11-12=0/1326, 10-11=0/2099, 9-10=0/2099, 8-9=0/1319
WEBS 6-8=-1465/0, 2-12=-1473/0, 6-9=0/840, 2-11=0/874, 5-9=-301/0, 3-11=-257/0, 4-9=-330/210

NOTES-
1) Unbalanced floor live loads have been considered for this design.
2) Refer to girder(s) for truss to truss connections.
3) This truss is designed in accordance with the 2015 International Residential Code sections R502.11.1 and R802.10.2 and referenced standard ANSI/TPI 1.
4) Recommend 2x6 strongbacks, on edge, spaced at 10-0-0 oc and fastened to each truss with 3-10d (0.131" X 3") nails. Strongbacks to be attached to walls at their outer ends or restrained by other means.

LOAD CASE(S) Standard

Established Basic Permit #

19-03671

Permit Number: 20-04896

Job	Truss	Truss Type	Qty	Ply	ENVISION NW
1903888F	F01G	Floor Supported Gable	1	1	Job Reference (optional)

Louws Truss, Inc., Ferndale, WA 98248

8.310 s Jun 26 2019 MiTek Industries, Inc. Fri Jul 12 12:33:26 2019 Page 1

ID:t9rACx?uLBlNQU_rXimwntyz1pO-SE9?5fWWXrjOJwm_NYDMARKp0gqTFVLbUbQ1YDyynJt

Scale = 1:22.3

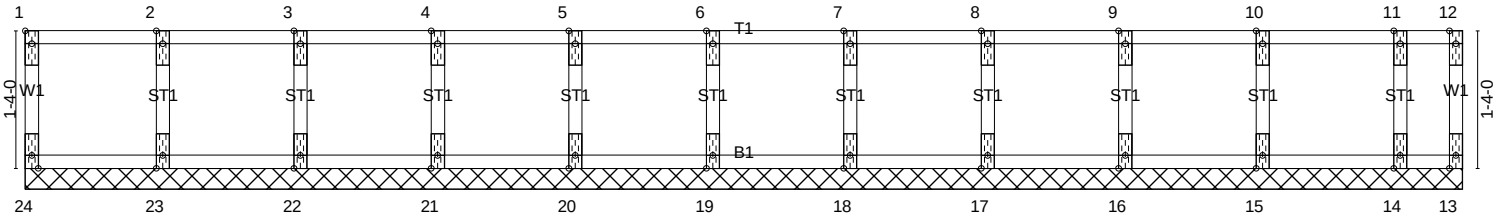

0-3-8 13-7-12 13-11-4

0-3-8 13-4-4 0-3-8

Plate Offsets (X,Y)-- [1:Edge,0-0-12]

LOADING (psf)		**SPACING-**	2-0-0	**CSI.**		**DEFL.**	in	(loc)	l/defl	L/d	**PLATES**	**GRIP**
TCLL	40.0	Plate Grip DOL	1.00	TC	0.07	Vert(LL)	n/a	-	n/a	999	MT20	220/195
TCDL	10.0	Lumber DOL	1.00	BC	0.01	Vert(CT)	n/a	-	n/a	999		
BCLL	0.0	Rep Stress Incr	YES	WB	0.02	Horz(CT)	0.00	13	n/a	n/a		
BCDL	5.0	Code IRC2015/TPI2014		Matrix-R							Weight: 55 lb	FT = 20%F, 11%E

LUMBER-

TOP CHORD 2x4 DF No.2(flat)
BOT CHORD 2x4 DF No.2(flat)
WEBS 2x4 DF No.2(flat)
OTHERS 2x4 DF No.2(flat)

BRACING-

TOP CHORD Structural wood sheathing directly applied or 6-0-0 oc purlins, except end verticals.
BOT CHORD Rigid ceiling directly applied or 10-0-0 oc bracing.

REACTIONS. All bearings 13-11-4.
(lb) - Max Grav All reactions 250 lb or less at joint(s) 24, 13, 23, 22, 21, 20, 19, 18, 17, 16, 15, 14

FORCES. (lb) - Max. Comp./Max. Ten. - All forces 250 (lb) or less except when shown.

NOTES-

1) All plates are 1.5x4 MT20 unless otherwise indicated.
2) Gable requires continuous bottom chord bearing.
3) Truss to be fully sheathed from one face or securely braced against lateral movement (i.e. diagonal web).
4) Gable studs spaced at 1-4-0 oc.
5) This truss is designed in accordance with the 2015 International Residential Code sections R502.11.1 and R802.10.2 and referenced standard ANSI/TPI 1.
6) Recommend 2x6 strongbacks, on edge, spaced at 10-0-0 oc and fastened to each truss with 3-10d (0.131" X 3") nails. Strongbacks to be attached to walls at their outer ends or restrained by other means.

LOAD CASE(S) Standard

Established Basic Permit #

19-03671

Permit Number: 20-04896

Job	Truss	Truss Type	Qty	Ply	ENVISION NW
1903888F	F02	Floor Supported Gable	1	1	Job Reference (optional)

Louws Truss, Inc., Ferndale, WA 98248

8.310 s Jun 26 2019 MiTek Industries, Inc. Fri Jul 12 12:33:29 2019 Page 1

ID:t9rACx?uLBlNQU_rXimwntyz1pO-spr7jgZPpm5zBOUZ2gm3n4yLItsESs41AZeh9XyynJq

0-1-8 0-1-8

Scale: 1/2"=1'

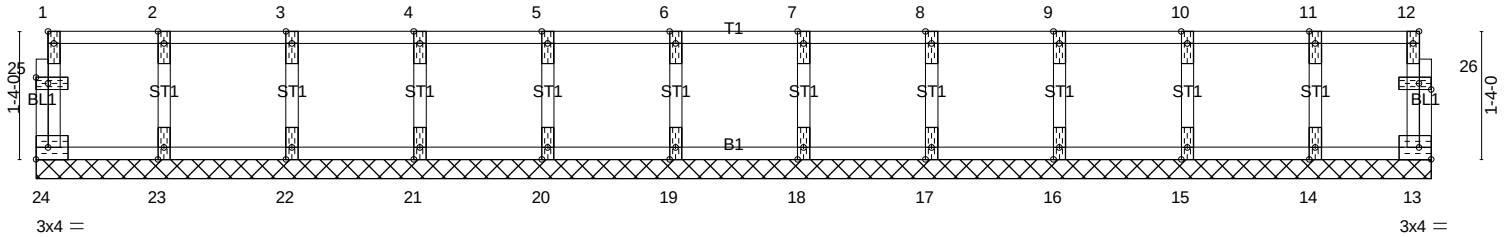

0-3-8 14-3-0 14-6-8

0-3-8 13-11-8 0-3-8

Plate Offsets (X,Y)-- [1:Edge,0-0-12], [25:0-1-8,0-0-12], [26:0-1-8,0-0-12]

LOADING (psf)		**SPACING-**	2-0-0	**CSI.**		**DEFL.**	in	(loc)	l/defl	L/d	**PLATES**	**GRIP**
TCLL	40.0	Plate Grip DOL	1.00	TC	0.06	Vert(LL)	n/a	-	n/a	999	MT20	220/195
TCDL	10.0	Lumber DOL	1.00	BC	0.01	Vert(CT)	n/a	-	n/a	999		
BCLL	0.0	Rep Stress Incr	YES	WB	0.02	Horz(CT)	0.00	13	n/a	n/a		
BCDL	5.0	Code IRC2015/TPI2014		Matrix-R							Weight: 59 lb	FT = 20%F, 11%E

LUMBER-
TOP CHORD 2x4 DF No.2(flat)
BOT CHORD 2x4 DF No.2(flat)
WEBS 2x4 DF No.2(flat)
OTHERS 2x4 DF No.2(flat)

BRACING-
TOP CHORD Structural wood sheathing directly applied or 6-0-0 oc purlins, except end verticals.
BOT CHORD Rigid ceiling directly applied or 10-0-0 oc bracing.

REACTIONS. All bearings 14-6-8.
(lb) - Max Grav All reactions 250 lb or less at joint(s) 24, 13, 23, 22, 21, 20, 19, 18, 17, 16, 15, 14

FORCES. (lb) - Max. Comp./Max. Ten. - All forces 250 (lb) or less except when shown.

NOTES-
1) All plates are 1.5x4 MT20 unless otherwise indicated.
2) Gable requires continuous bottom chord bearing.
3) Truss to be fully sheathed from one face or securely braced against lateral movement (i.e. diagonal web).
4) Gable studs spaced at 1-4-0 oc.
5) This truss is designed in accordance with the 2015 International Residential Code sections R502.11.1 and R802.10.2 and referenced standard ANSI/TPI 1.
6) Recommend 2x6 strongbacks, on edge, spaced at 10-0-0 oc and fastened to each truss with 3-10d (0.131" X 3") nails. Strongbacks to be attached to walls at their outer ends or restrained by other means.

LOAD CASE(S) Standard

Established Basic Permit #

19-03671

Permit Number: 20-04896

Job	Truss	Truss Type	Qty	Ply	ENVISION NW
1903888F	F02A	Floor	2	1	Job Reference (optional)

Louws Truss, Inc., Ferndale, WA 98248

8.310 s Jun 26 2019 MiTek Industries, Inc. Fri Jul 12 12:33:31 2019 Page 1

ID:t9rACx?uLBlNQU_rXimwntyz1pO-oCyu8MafLNLgQiey95oXtV2YshJPwieKdt7oEQyynJo

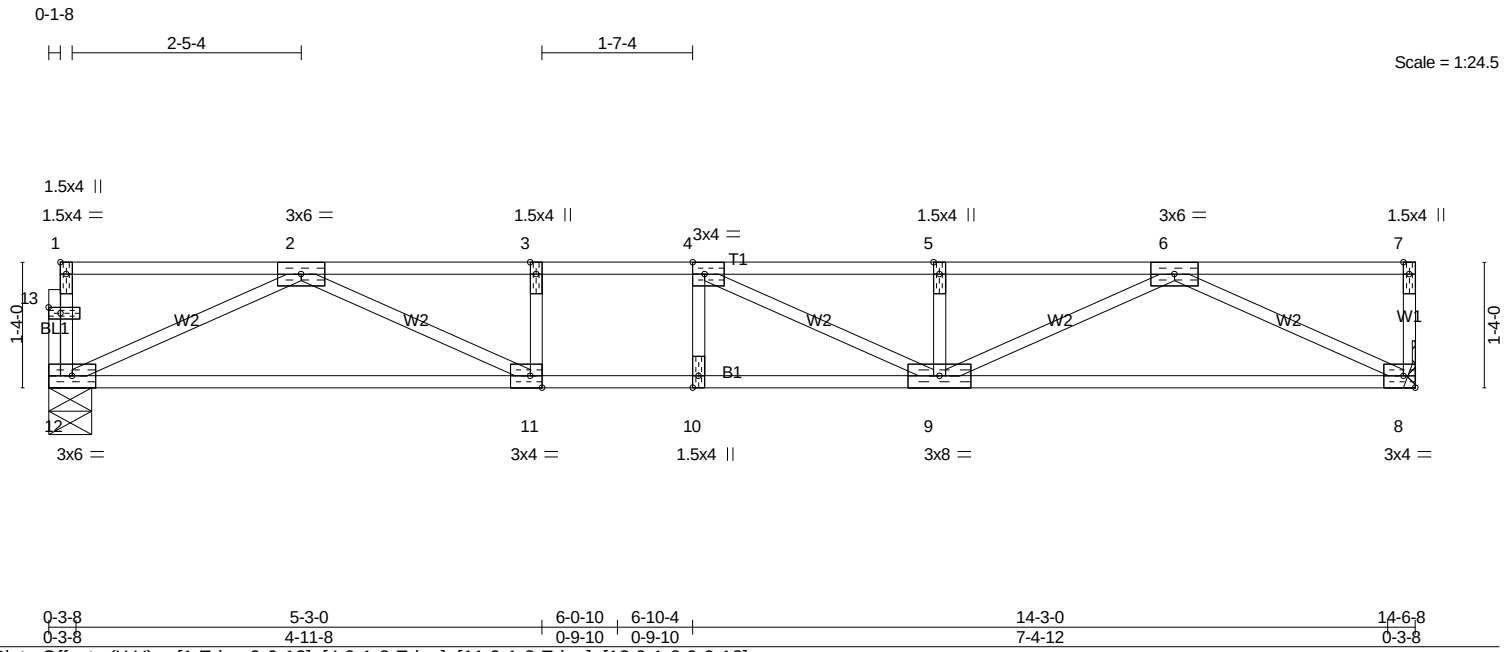

Plate Offsets (X,Y)-- [1:Edge,0-0-12], [4:0-1-8,Edge], [11:0-1-8,Edge], [13:0-1-8,0-0-12]

LOADING (psf)		**SPACING-**	2-0-0	**CSI.**		**DEFL.**	in	(loc)	l/defl	L/d	**PLATES**	**GRIP**
TCLL	40.0	Plate Grip DOL	1.00	TC	0.64	Vert(LL)	-0.20	9-10	>865	480	MT20	220/195
TCDL	10.0	Lumber DOL	1.00	BC	0.92	Vert(CT)	-0.25	9-10	>682	360		
BCLL	0.0	Rep Stress Incr	YES	WB	0.27	Horz(CT)	0.03	8	n/a	n/a		
BCDL	5.0	Code IRC2015/TPI2014		Matrix-SH							Weight: 66 lb	FT = 20%F, 11%E

LUMBER-
TOP CHORD 2x4 DF No.2(flat)
BOT CHORD 2x4 DF No.2(flat)
WEBS 2x4 DF No.2(flat)

BRACING-
TOP CHORD Structural wood sheathing directly applied or 6-0-0 oc purlins, except end verticals.
BOT CHORD Rigid ceiling directly applied or 10-0-0 oc bracing, Except: 2-2-0 oc bracing: 9-10.

REACTIONS. (lb/size) 12=783/0-5-8 (min. 0-1-8), 8=789/Mechanical

FORCES. (lb) - Max. Comp./Max. Ten. - All forces 250 (lb) or less except when shown.
TOP CHORD 2-3=-2260/0, 3-4=-2260/0, 4-5=-2204/0, 5-6=-2204/0
BOT CHORD 11-12=0/1413, 10-11=0/2260, 9-10=0/2260, 8-9=0/1381
WEBS 6-8=-1534/0, 2-12=-1556/0, 6-9=0/914, 2-11=0/969, 5-9=-315/0, 3-11=-295/0, 4-9=-395/188

NOTES-
1) Unbalanced floor live loads have been considered for this design.
2) Refer to girder(s) for truss to truss connections.
3) This truss is designed in accordance with the 2015 International Residential Code sections R502.11.1 and R802.10.2 and referenced standard ANSI/TPI 1.
4) Recommend 2x6 strongbacks, on edge, spaced at 10-0-0 oc and fastened to each truss with 3-10d (0.131" X 3") nails. Strongbacks to be attached to walls at their outer ends or restrained by other means.
5) CAUTION, Do not erect truss backwards.

LOAD CASE(S) Standard

Established Basic Permit #

19-03671

Permit Number: 20-04896

Job	Truss	Truss Type	Qty	Ply	ENVISION NW
1903888F	F02B	Floor	1	1	Job Reference (optional)

Louws Truss, Inc., Ferndale, WA 98248

8.310 s Jun 26 2019 MiTek Industries, Inc. Fri Jul 12 12:33:34 2019 Page 1

ID:t9rACx?uLBlNQU_rXimwntyz1pO-Dne0nOdXeIkFH9NXrDMEU7g3muTF736mKrMSrlyynJl

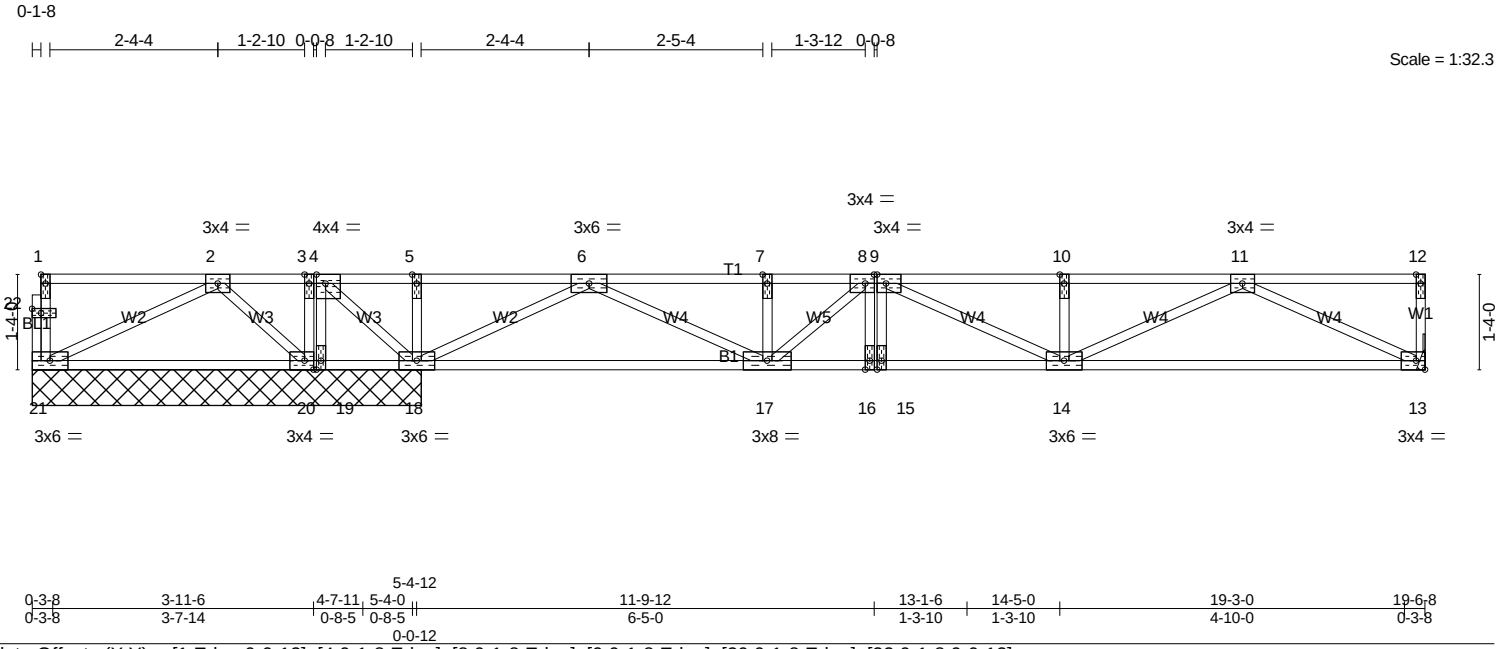

Plate Offsets (X,Y)-- [1:Edge,0-0-12], [4:0-1-8,Edge], [8:0-1-8,Edge], [9:0-1-8,Edge], [20:0-1-8,Edge], [22:0-1-8,0-0-12]

LOADING (psf)		**SPACING-**	2-0-0	**CSI.**		**DEFL.**	in	(loc)	l/defl	L/d	**PLATES**	**GRIP**
TCLL	40.0	Plate Grip DOL	1.00	TC	0.53	Vert(LL)	-0.07	14-15	>999	480	MT20	220/195
TCDL	10.0	Lumber DOL	1.00	BC	0.40	Vert(CT)	-0.10	13-14	>999	360		
BCLL	0.0	Rep Stress Incr	YES	WB	0.29	Horz(CT)	0.01	13	n/a	n/a		
BCDL	5.0	Code IRC2015/TPI2014		Matrix-SH							Weight: 95 lb	FT = 20%F, 11%E

LUMBER-
TOP CHORD 2x4 DF No.2(flat)
BOT CHORD 2x4 DF No.2(flat)
WEBS 2x4 DF No.2(flat)

BRACING-
TOP CHORD Structural wood sheathing directly applied or 6-0-0 oc purlins, except end verticals.
BOT CHORD Rigid ceiling directly applied or 6-0-0 oc bracing.

REACTIONS. All bearings 5-5-8 except (jt=length) 13=Mechanical.
(lb) - Max Uplift All uplift 100 lb or less at joint(s) except 21=-135(LC 4), 19=-910(LC 4)
Max Grav All reactions 250 lb or less at joint(s) 21 except 18=1813(LC 1), 20=437(LC 1), 13=643(LC 4)

FORCES. (lb) - Max. Comp./Max. Ten. - All forces 250 (lb) or less except when shown.
TOP CHORD 2-3=0/633, 3-4=0/633, 4-5=0/1492, 5-6=0/1492, 6-7=-1083/0, 7-8=-1083/0, 8-9=-1431/0, 9-10=-1581/0, 10-11=-1581/0
BOT CHORD 20-21=-342/42, 19-20=-633/0, 18-19=-633/0, 16-17=0/1431, 15-16=0/1431, 14-15=0/1431, 13-14=0/1079
WEBS 2-21=-41/382, 4-18=-1187/0, 2-20=-555/0, 4-19=0/711, 11-13=-1198/0, 6-18=-1705/0, 11-14=0/558, 6-17=0/1154, 10-14=-258/0, 9-14=-107/336, 8-17=-511/0, 8-16=0/255

NOTES-
1) Unbalanced floor live loads have been considered for this design.
2) All plates are 1.5x4 MT20 unless otherwise indicated.
3) Refer to girder(s) for truss to truss connections.
4) Provide mechanical connection (by others) of truss to bearing plate capable of withstanding 135 lb uplift at joint 21 and 910 lb uplift at joint 19.
5) This truss is designed in accordance with the 2015 International Residential Code sections R502.11.1 and R802.10.2 and referenced standard ANSI/TPI 1.
6) Recommend 2x6 strongbacks, on edge, spaced at 10-0-0 oc and fastened to each truss with 3-10d (0.131" X 3") nails. Strongbacks to be attached to walls at their outer ends or restrained by other means.
7) CAUTION, Do not erect truss backwards.

LOAD CASE(S) Standard

Established Basic Permit #

19-03671

Permit Number: 20-04896

Job	Truss	Truss Type	Qty	Ply	ENVISION NW
1903888F	F02C	Floor	9	1	Job Reference (optional)

Louws Truss, Inc., Ferndale, WA 98248

8.310 s Jun 26 2019 MiTek Industries, Inc. Fri Jul 12 12:33:37 2019 Page 1

ID:t9rACx?uLBlNQU_rXimwntyz1pO-dMJ9PPfQxD6q8d56WLvx6mIVt6QrKOPC0pa6R4yynJi

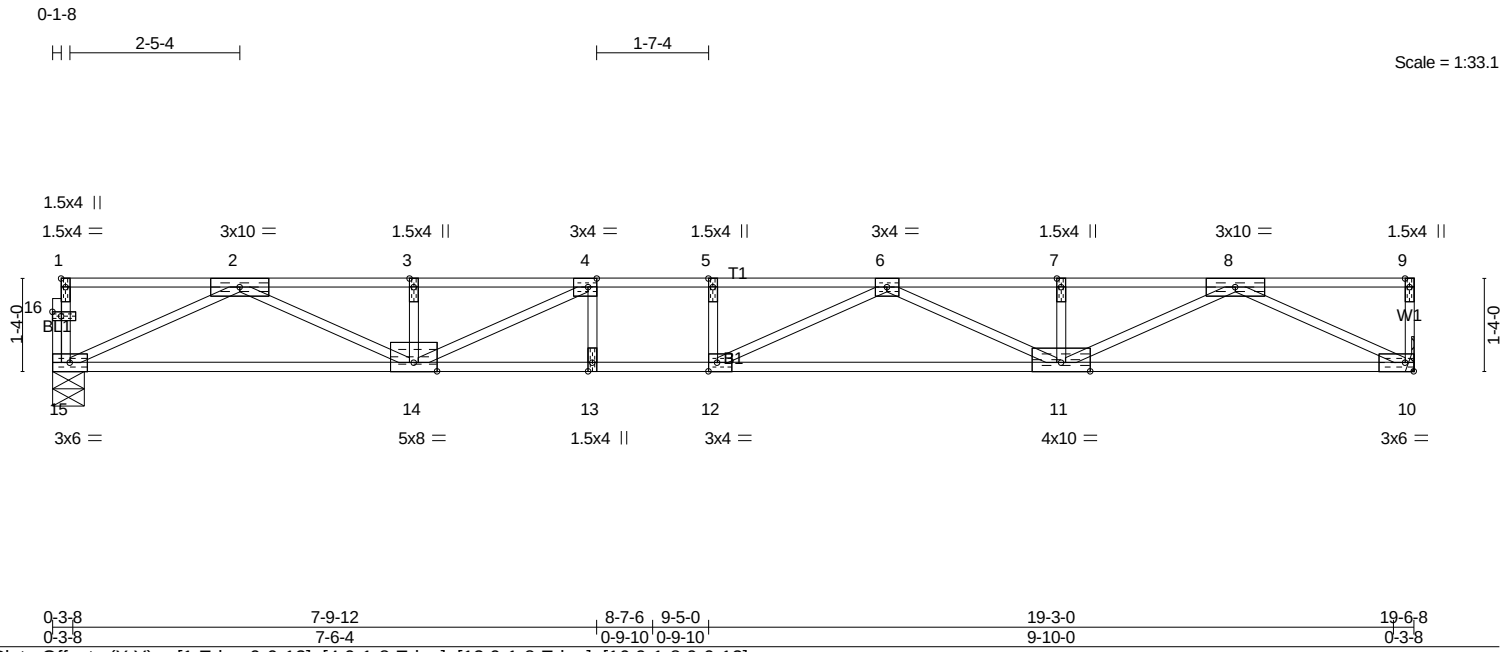

Plate Offsets (X,Y)-- [1:Edge,0-0-12], [4:0-1-8,Edge], [12:0-1-8,Edge], [16:0-1-8,0-0-12]

LOADING (psf)		**SPACING-**	2-0-0	**CSI.**		**DEFL.**	in	(loc)	l/defl	L/d	**PLATES**	**GRIP**
TCLL	40.0	Plate Grip DOL	1.00	TC	0.86	Vert(LL)	-0.37	11-12	>627	480	MT20	220/195
TCDL	10.0	Lumber DOL	1.00	BC	0.67	Vert(CT)	-0.52	11-12	>443	360		
BCLL	0.0	Rep Stress Incr	YES	WB	0.38	Horz(CT)	0.07	10	n/a	n/a		
BCDL	5.0	Code IRC2015/TPI2014		Matrix-SH							Weight: 88 lb	FT = 20%F, 11%E

LUMBER-
TOP CHORD 2x4 DF No.2(flat)
BOT CHORD 2x4 DF 2400F 2.0E(flat)
WEBS 2x4 DF No.2(flat)

BRACING-
TOP CHORD Structural wood sheathing directly applied or 2-2-0 oc purlins, except end verticals.
BOT CHORD Rigid ceiling directly applied or 10-0-0 oc bracing.

REACTIONS. (lb/size) 15=1058/0-5-8 (min. 0-1-8), 10=1064/Mechanical

FORCES. (lb) - Max. Comp./Max. Ten. - All forces 250 (lb) or less except when shown.
TOP CHORD 2-3=-3319/0, 3-4=-3319/0, 4-5=-4191/0, 5-6=-4191/0, 6-7=-3318/0, 7-8=-3318/0
BOT CHORD 14-15=0/1986, 13-14=0/4191, 12-13=0/4191, 11-12=0/4070, 10-11=0/1957
WEBS 8-10=-2173/0, 2-15=-2190/0, 8-11=0/1512, 2-14=0/1481, 3-14=-272/30, 6-11=-835/0, 4-14=-1161/0, 6-12=-233/561

NOTES-
1) Unbalanced floor live loads have been considered for this design.
2) Refer to girder(s) for truss to truss connections.
3) This truss is designed in accordance with the 2015 International Residential Code sections R502.11.1 and R802.10.2 and referenced standard ANSI/TPI 1.
4) Recommend 2x6 strongbacks, on edge, spaced at 10-0-0 oc and fastened to each truss with 3-10d (0.131" X 3") nails. Strongbacks to be attached to walls at their outer ends or restrained by other means.
5) CAUTION, Do not erect truss backwards.

LOAD CASE(S) Standard

Established Basic Permit #

19-03671

Permit Number: 20-04896

Job	Truss	Truss Type	Qty	Ply	ENVISION NW
1903888F	F02D	Floor	4	1	Job Reference (optional)

Louws Truss, Inc., Ferndale, WA 98248

8.310 s Jun 26 2019 MiTek Industries, Inc. Fri Jul 12 12:33:39 2019 Page 1

ID:t9rACx?uLBlNQU_rXimwntyz1pO-ZkRvq5ggTrMYNwFUdmxPBBNz0v9AoKZVT73DWyyynJg

2-5-4 1-7-8

Scale = 1:20.1

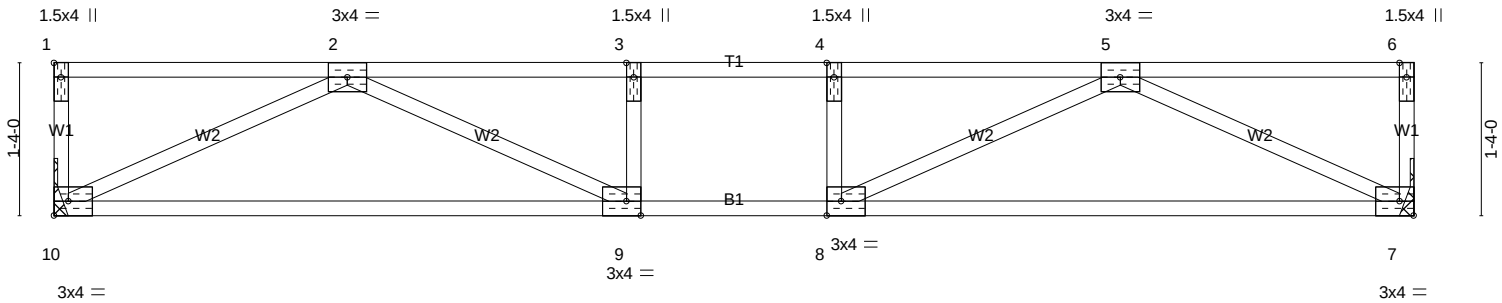

0-3-8	5-1-8	5-11-4	6-9-0	11-7-0	11-10-8
0-3-8	4-10-0	0-9-12	0-9-12	4-10-0	0-3-8

Plate Offsets (X,Y)-- [1:Edge,0-0-12], [8:0-1-8,Edge], [9:0-1-8,Edge]

LOADING (psf)		**SPACING-**	2-0-0	**CSI.**		**DEFL.**	in	(loc)	l/defl	L/d	**PLATES**	**GRIP**
TCLL	40.0	Plate Grip DOL	1.00	TC	0.37	Vert(LL)	-0.11	9-10	>999	480	MT20	220/195
TCDL	10.0	Lumber DOL	1.00	BC	0.48	Vert(CT)	-0.17	9-10	>840	360		
BCLL	0.0	Rep Stress Incr	YES	WB	0.21	Horz(CT)	0.02	7	n/a	n/a		
BCDL	5.0	Code IRC2015/TPI2014		Matrix-SH							Weight: 52 lb	FT = 20%F, 11%E

LUMBER-
TOP CHORD 2x4 DF No.2(flat)
BOT CHORD 2x4 DF No.2(flat)
WEBS 2x4 DF No.2(flat)

BRACING-
TOP CHORD Structural wood sheathing directly applied or 6-0-0 oc purlins, except end verticals.
BOT CHORD Rigid ceiling directly applied or 10-0-0 oc bracing.

REACTIONS. (lb/size) 7=646/Mechanical, 10=646/Mechanical

FORCES. (lb) - Max. Comp./Max. Ten. - All forces 250 (lb) or less except when shown.
TOP CHORD 2-3=-1574/0, 3-4=-1574/0, 4-5=-1574/0
BOT CHORD 9-10=0/1088, 8-9=0/1574, 7-8=0/1088
WEBS 5-7=-1208/0, 2-10=-1208/0, 5-8=0/618, 2-9=0/618

NOTES-
1) Unbalanced floor live loads have been considered for this design.
2) Refer to girder(s) for truss to truss connections.
3) This truss is designed in accordance with the 2015 International Residential Code sections R502.11.1 and R802.10.2 and referenced standard ANSI/TPI 1.
4) Recommend 2x6 strongbacks, on edge, spaced at 10-0-0 oc and fastened to each truss with 3-10d (0.131" X 3") nails. Strongbacks to be attached to walls at their outer ends or restrained by other means.

LOAD CASE(S) Standard

Established Basic Permit #

19-03671

Permit Number: 20-04896

Job	Truss	Truss Type	Qty	Ply	ENVISION NW
1903888F	F02E	Floor	2	1	Job Reference (optional)

Louws Truss, Inc., Ferndale, WA 98248

8.310 s Jun 26 2019 MiTek Industries, Inc. Fri Jul 12 12:33:42 2019 Page 1

ID:t9rACx?uLBlNQU_rXimwntyz1pO-_J72S7jYlmk7EO_3JvV6pp?R279F?iox94It7HyynJd

Scale = 1:17.4

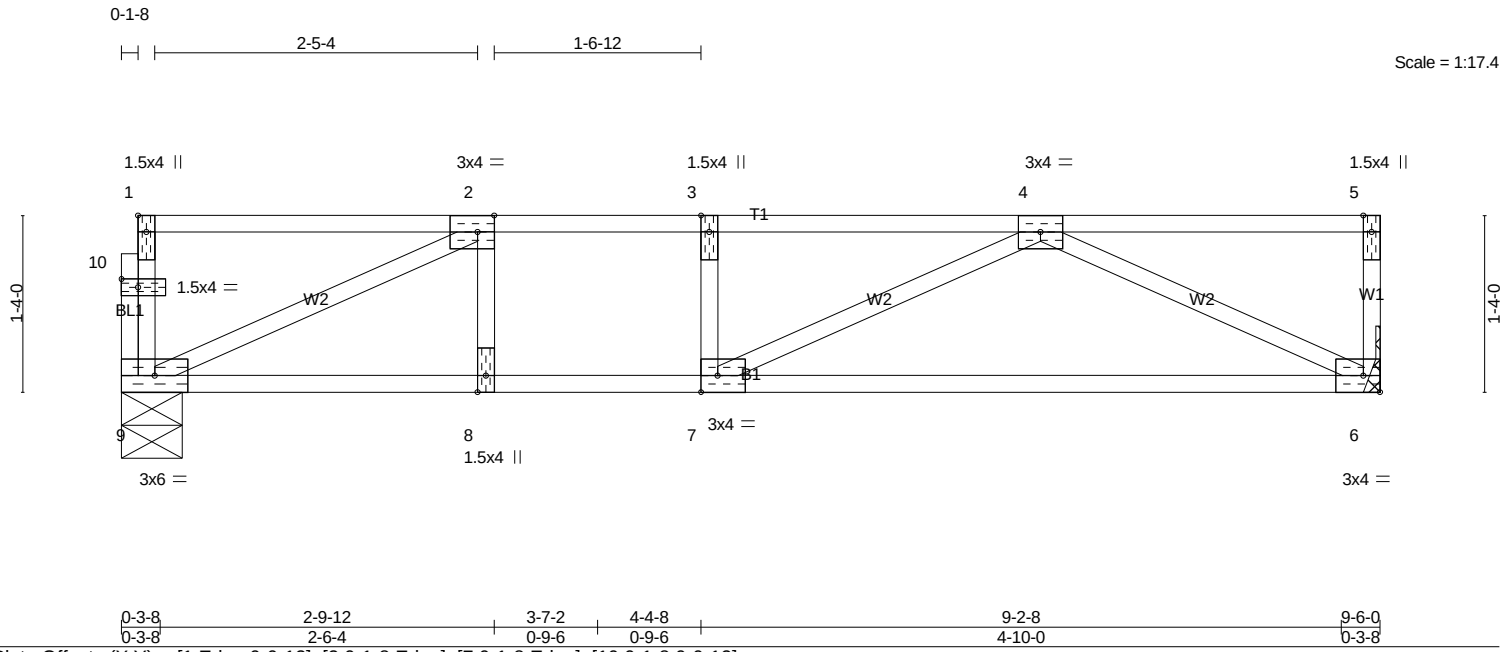

Plate Offsets (X,Y)-- [1:Edge,0-0-12], [2:0-1-8,Edge], [7:0-1-8,Edge], [10:0-1-8,0-0-12]

LOADING (psf)		**SPACING-**	2-0-0	**CSI.**		**DEFL.**	in	(loc)	l/defl	L/d	**PLATES**	**GRIP**
TCLL	40.0	Plate Grip DOL	1.00	TC	0.57	Vert(LL)	-0.14	6-7	>827	480	MT20	220/195
TCDL	10.0	Lumber DOL	1.00	BC	0.59	Vert(CT)	-0.22	6-7	>511	360		
BCLL	0.0	Rep Stress Incr	YES	WB	0.18	Horz(CT)	0.01	6	n/a	n/a		
BCDL	5.0	Code IRC2015/TPI2014		Matrix-SH							Weight: 44 lb	FT = 20%F, 11%E

LUMBER-
TOP CHORD 2x4 DF No.2(flat)
BOT CHORD 2x4 DF No.2(flat)
WEBS 2x4 DF No.2(flat)

BRACING-
TOP CHORD Structural wood sheathing directly applied or 6-0-0 oc purlins, except end verticals.
BOT CHORD Rigid ceiling directly applied or 10-0-0 oc bracing.

REACTIONS. (lb/size) 9=506/0-5-8 (min. 0-1-8), 6=512/Mechanical

FORCES. (lb) - Max. Comp./Max. Ten. - All forces 250 (lb) or less except when shown.
TOP CHORD 2-3=-936/0, 3-4=-936/0
BOT CHORD 8-9=0/936, 7-8=0/936, 6-7=0/812
WEBS 4-6=-902/0, 2-9=-1025/0, 4-7=0/274

NOTES-
1) Unbalanced floor live loads have been considered for this design.
2) Refer to girder(s) for truss to truss connections.
3) This truss is designed in accordance with the 2015 International Residential Code sections R502.11.1 and R802.10.2 and referenced standard ANSI/TPI 1.
4) Recommend 2x6 strongbacks, on edge, spaced at 10-0-0 oc and fastened to each truss with 3-10d (0.131" X 3") nails. Strongbacks to be attached to walls at their outer ends or restrained by other means.
5) CAUTION, Do not erect truss backwards.

LOAD CASE(S) Standard

Established Basic Permit #

19-03671

Permit Number: 20-04896

Job	Truss	Truss Type	Qty	Ply	ENVISION NW
1903888F	F02F	Floor Supported Gable	1	1	Job Reference (optional)

Louws Truss, Inc., Ferndale, WA 98248

8.310 s Jun 26 2019 MiTek Industries, Inc. Fri Jul 12 12:33:44 2019 Page 1

ID:t9rACx?uLBlNQU_rXimwntyz1pO-wiFotpkpHN_qUh8SQJXauE4uUwzgTeoEdOn_BAyynJb

0-1-8 0-1-8

Scale = 1:17.4

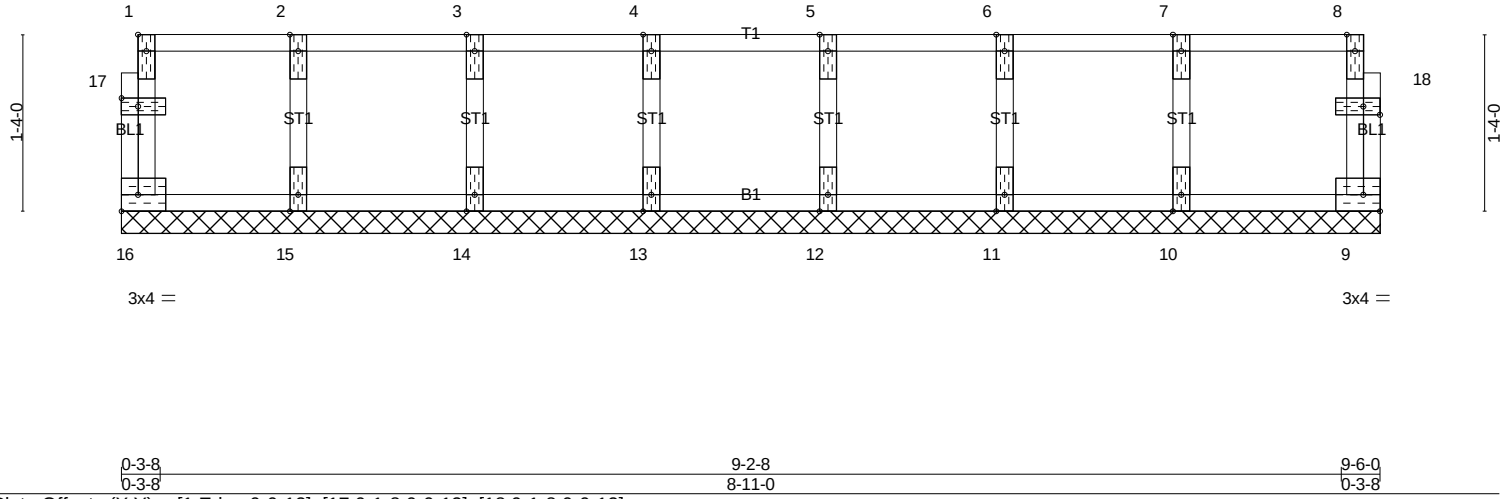

Plate Offsets (X,Y)-- [1:Edge,0-0-12], [17:0-1-8,0-0-12], [18:0-1-8,0-0-12]

LOADING (psf)		**SPACING-**	2-0-0	**CSI.**		**DEFL.**	in	(loc)	l/defl	L/d	**PLATES**	**GRIP**
TCLL	40.0	Plate Grip DOL	1.00	TC	0.07	Vert(LL)	n/a	-	n/a	999	MT20	220/195
TCDL	10.0	Lumber DOL	1.00	BC	0.01	Vert(CT)	n/a	-	n/a	999		
BCLL	0.0	Rep Stress Incr	YES	WB	0.02	Horz(CT)	0.00	9	n/a	n/a		
BCDL	5.0	Code IRC2015/TPI2014		Matrix-R							Weight: 40 lb	FT = 20%F, 11%E

LUMBER-

TOP CHORD 2x4 DF No.2(flat)
BOT CHORD 2x4 DF No.2(flat)
WEBS 2x4 DF No.2(flat)
OTHERS 2x4 DF No.2(flat)

BRACING-

TOP CHORD Structural wood sheathing directly applied or 6-0-0 oc purlins, except end verticals.
BOT CHORD Rigid ceiling directly applied or 10-0-0 oc bracing.

REACTIONS. All bearings 9-6-0.
(lb) - Max Grav All reactions 250 lb or less at joint(s) 16, 9, 15, 14, 13, 12, 11, 10

FORCES. (lb) - Max. Comp./Max. Ten. - All forces 250 (lb) or less except when shown.

NOTES-

1) All plates are 1.5x4 MT20 unless otherwise indicated.
2) Gable requires continuous bottom chord bearing.
3) Truss to be fully sheathed from one face or securely braced against lateral movement (i.e. diagonal web).
4) Gable studs spaced at 1-4-0 oc.
5) This truss is designed in accordance with the 2015 International Residential Code sections R502.11.1 and R802.10.2 and referenced standard ANSI/TPI 1.
6) Recommend 2x6 strongbacks, on edge, spaced at 10-0-0 oc and fastened to each truss with 3-10d (0.131" X 3") nails. Strongbacks to be attached to walls at their outer ends or restrained by other means.

LOAD CASE(S) Standard

Established Basic Permit #

19-03671

Permit Number: 20-04896

Job	Truss	Truss Type	Qty	Ply	ENVISION NW
1903888F	F02G	Floor	4	1	Job Reference (optional)

Louws Truss, Inc., Ferndale, WA 98248

8.310 s Jun 26 2019 MiTek Industries, Inc. Fri Jul 12 12:33:47 2019 Page 1

ID:t9rACx?uLBlNQU_rXimwntyz1pO-KHwxVqnhaIMPL9s15S5HWtiLP8y1g_VhJM?eoVyynJY

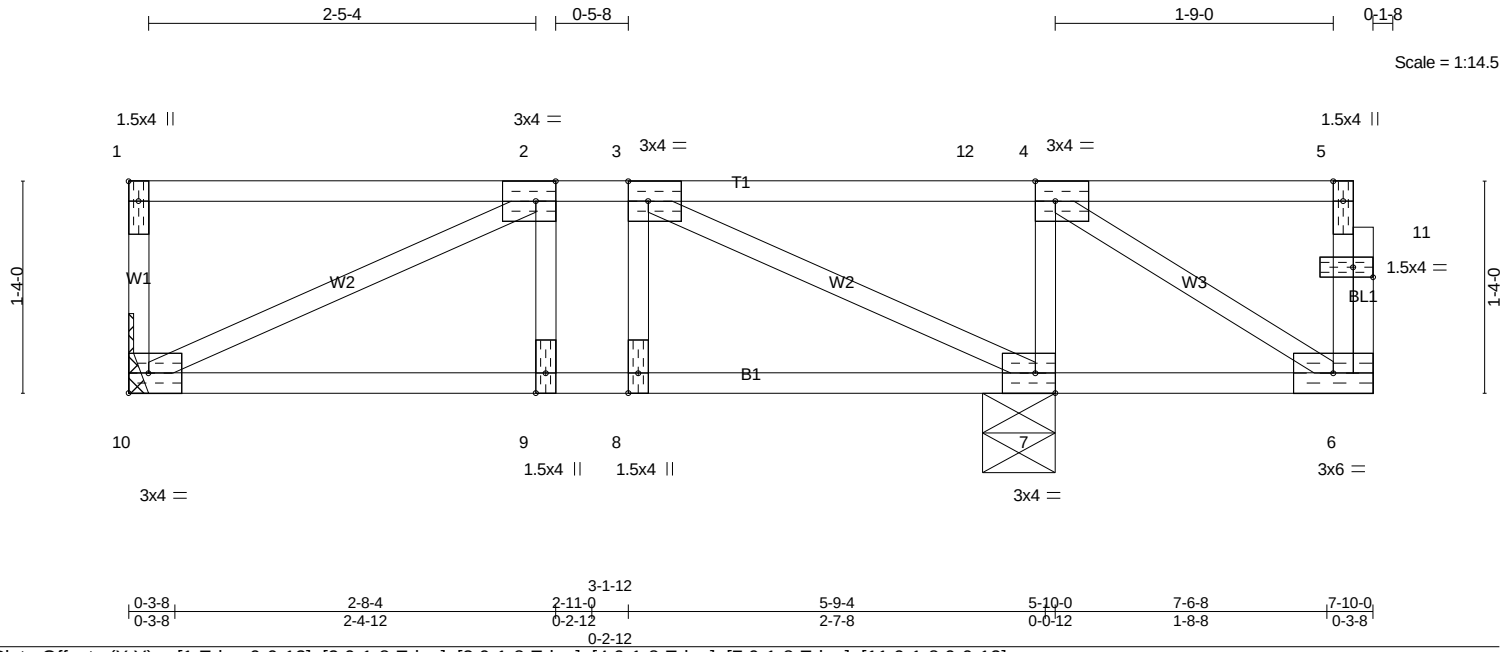

Plate Offsets (X,Y)-- [1:Edge,0-0-12], [2:0-1-8,Edge], [3:0-1-8,Edge], [4:0-1-8,Edge], [7:0-1-8,Edge], [11:0-1-8,0-0-12]

LOADING (psf)		**SPACING-**	2-0-0	**CSI.**		**DEFL.**	in	(loc)	l/defl	L/d	**PLATES**	**GRIP**
TCLL	40.0	Plate Grip DOL	1.00	TC	0.34	Vert(LL)	-0.02	9-10	>999	480	MT20	220/195
TCDL	10.0	Lumber DOL	1.00	BC	0.23	Vert(CT)	-0.02	9-10	>999	360		
BCLL	0.0	Rep Stress Incr	YES	WB	0.08	Horz(CT)	0.00	7	n/a	n/a		
BCDL	5.0	Code IRC2015/TPI2014		Matrix-SH							Weight: 40 lb	FT = 20%F, 11%E

LUMBER-
TOP CHORD 2x4 DF No.2(flat)
BOT CHORD 2x4 DF No.2(flat)
WEBS 2x4 DF No.2(flat)

BRACING-
TOP CHORD Structural wood sheathing directly applied or 6-0-0 oc purlins, except end verticals.
BOT CHORD Rigid ceiling directly applied or 10-0-0 oc bracing, Except: 6-0-0 oc bracing: 6-7.

REACTIONS. (lb/size) 7=555/0-5-8 (min. 0-1-8), 10=280/Mechanical
Max Grav 7=555(LC 1), 10=303(LC 3)

FORCES. (lb) - Max. Comp./Max. Ten. - All forces 250 (lb) or less except when shown.
TOP CHORD 2-3=-387/0
BOT CHORD 9-10=0/387, 8-9=0/387, 7-8=0/387
WEBS 4-7=-324/0, 2-10=-428/0, 3-7=-490/0

NOTES-
1) Unbalanced floor live loads have been considered for this design.
2) Refer to girder(s) for truss to truss connections.
3) This truss is designed in accordance with the 2015 International Residential Code sections R502.11.1 and R802.10.2 and referenced standard ANSI/TPI 1.
4) Recommend 2x6 strongbacks, on edge, spaced at 10-0-0 oc and fastened to each truss with 3-10d (0.131" X 3") nails. Strongbacks to be attached to walls at their outer ends or restrained by other means.
5) CAUTION, Do not erect truss backwards.

LOAD CASE(S) Standard

Established Basic Permit #

19-03671

Permit Number: 20-04896

Job	Truss	Truss Type	Qty	Ply	ENVISION NW
1903888F	GT01	Floor Girder	1	2	Job Reference (optional)

Louws Truss, Inc., Ferndale, WA 98248

8.310 s Jun 26 2019 MiTek Industries, Inc. Fri Jul 12 12:33:49 2019 Page 1
ID:t9rACx?uLBlNQU_rXimwntyz1pO-Gf2hwWox6vd7aT0PDt7lbInl5xWT8v?zmgUltNyynJW

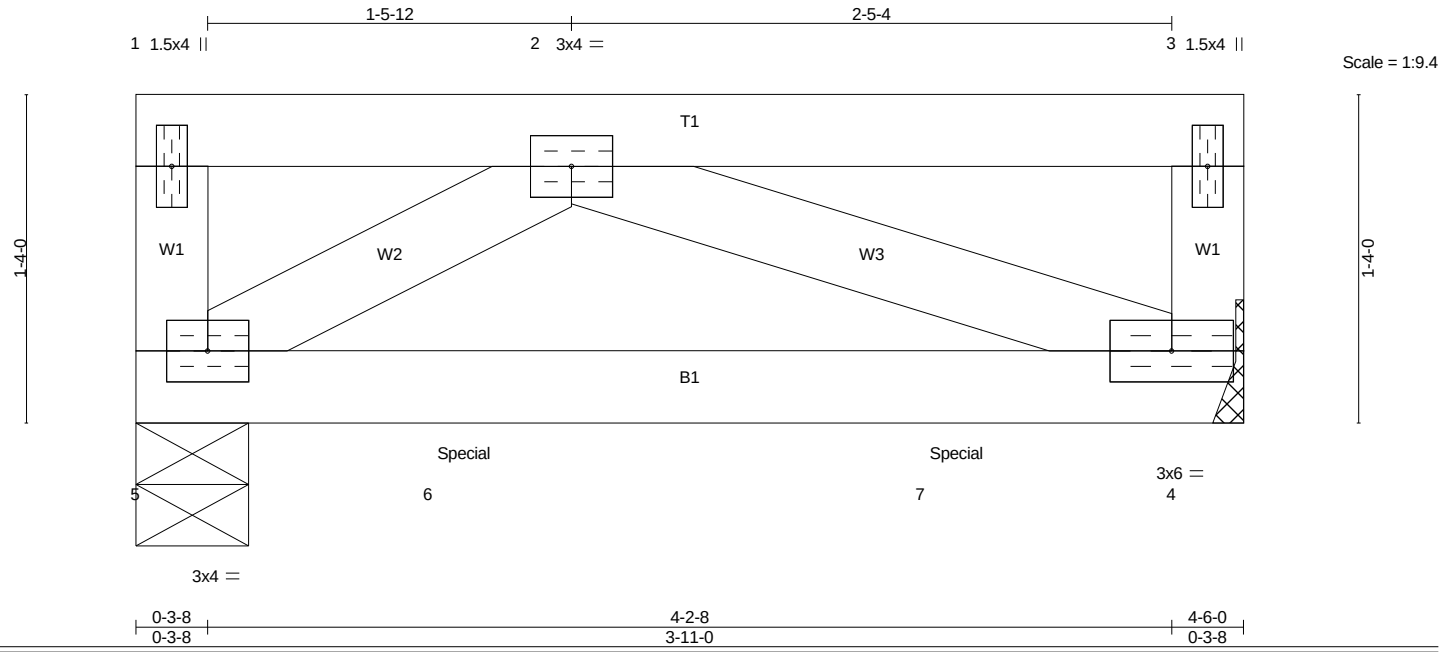

LOADING (psf)		SPACING-	2-0-0	CSI.		DEFL.	in	(loc)	l/defl	L/d	PLATES	GRIP
TCLL	40.0	Plate Grip DOL	1.00	TC	0.07	Vert(LL)	-0.10	4-5	>512	480	MT20	220/195
TCDL	10.0	Lumber DOL	1.00	BC	0.68	Vert(CT)	-0.14	4-5	>368	360		
BCLL	0.0	Rep Stress Incr	NO	WB	0.02	Horz(CT)	0.00	4	n/a	n/a		
BCDL	5.0	Code IRC2015/TPI2014		Matrix-P							Weight: 40 lb	FT = 0%

LUMBER-
TOP CHORD 2x4 DF No.2
BOT CHORD 2x4 DF 2400F 2.0E
WEBS 2x4 DF No.2

BRACING-
TOP CHORD Structural wood sheathing directly applied or 4-6-0 oc purlins, except end verticals.
BOT CHORD Rigid ceiling directly applied or 10-0-0 oc bracing.

REACTIONS. (lb/size) 4=1011/Mechanical, 5=951/0-5-8 (min. 0-1-8)

FORCES. (lb) - Max. Comp./Max. Ten. - All forces 250 (lb) or less except when shown.
BOT CHORD 5-6=0/252, 6-7=0/252, 4-7=0/252
WEBS 2-4=-272/0, 2-5=-300/0

NOTES-
1) 2-ply truss to be connected together with 10d (0.131"x3") nails as follows:
Top chords connected as follows: 2x4 - 1 row at 0-9-0 oc.
Bottom chords connected as follows: 2x4 - 1 row at 0-5-0 oc.
Webs connected as follows: 2x4 - 1 row at 0-9-0 oc.
2) All loads are considered equally applied to all plies, except if noted as front (F) or back (B) face in the LOAD CASE(S) section. Ply to ply connections have been provided to distribute only loads noted as (F) or (B), unless otherwise indicated.
3) Refer to girder(s) for truss to truss connections.
4) This truss is designed in accordance with the 2015 International Residential Code sections R502.11.1 and R802.10.2 and referenced standard ANSI/TPI 1.
5) Recommend 2x6 strongbacks, on edge, spaced at 10-0-0 oc and fastened to each truss with 3-10d (0.131" X 3") nails. Strongbacks to be attached to walls at their outer ends or restrained by other means.
6) Hanger(s) or other connection device(s) shall be provided sufficient to support concentrated load(s) 750 lb down at 1-4-0, and 750 lb down at 3-4-0 on bottom chord. The design/selection of such connection device(s) is the responsibility of others.

LOAD CASE(S) Standard
1) Dead + Floor Live (balanced): Lumber Increase=1.00, Plate Increase=1.00
Uniform Loads (plf)
Vert: 4-5=-10, 1-3=-100
Concentrated Loads (lb)
Vert: 6=-750(F) 7=-750(F)

Established Basic Permit #
19-03671

Permit Number: 20-04896

Job	Truss	Truss Type	Qty	Ply	ENVISION NW
1903888F	GT01B	Floor Girder	1	2	Job Reference (optional)

Louws Truss, Inc., Ferndale, WA 98248

8.310 s Jun 26 2019 MiTek Industries, Inc. Fri Jul 12 12:33:54 2019 Page 1

ID:t9rACx?uLBlNQU_rXimwntyz1pO-ddrazDs4xSFQgEvN0QjwlLVS3yBfp4MiwyCWYbyynJR

Scale = 1:16.4

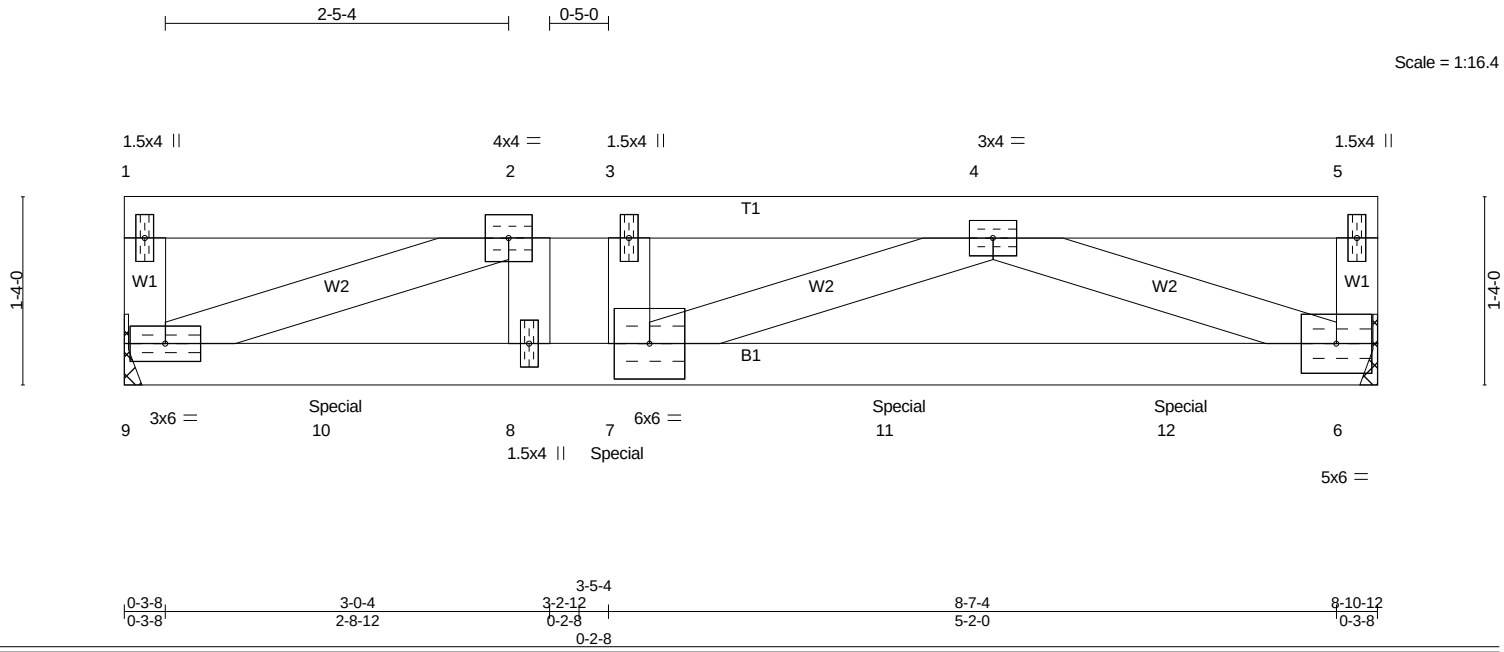

LOADING (psf)		SPACING-	2-0-0	CSI.		DEFL.	in	(loc)	l/defl	L/d	PLATES	GRIP
TCLL	40.0	Plate Grip DOL	1.00	TC	0.70	Vert(LL)	-0.16	6-7	>658	480	MT20	220/195
TCDL	10.0	Lumber DOL	1.00	BC	0.87	Vert(CT)	-0.22	6-7	>476	360		
BCLL	0.0	Rep Stress Incr	NO	WB	0.33	Horz(CT)	0.02	6	n/a	n/a		
BCDL	5.0	Code IRC2015/TPI2014		Matrix-SH							Weight: 77 lb	FT = 0%

LUMBER-
TOP CHORD 2x4 DF No.2
BOT CHORD 2x4 DF 2400F 2.0E
WEBS 2x4 DF No.2

BRACING-
TOP CHORD Structural wood sheathing directly applied or 4-9-13 oc purlins, except end verticals.
BOT CHORD Rigid ceiling directly applied or 10-0-0 oc bracing.

REACTIONS. (lb/size) 6=2182/Mechanical, 9=2125/Mechanical

FORCES. (lb) - Max. Comp./Max. Ten. - All forces 250 (lb) or less except when shown.
TOP CHORD 2-3=-4771/0, 3-4=-4771/0, 4-5=-580/0
BOT CHORD 9-10=0/4771, 8-10=0/4771, 7-8=0/4771, 7-11=0/3301, 11-12=0/3301, 6-12=0/3301
WEBS 4-6=-2934/0, 2-9=-4924/0, 4-7=0/1720, 2-8=0/486, 3-7=0/1197

NOTES-
1) 2-ply truss to be connected together with 10d (0.131"x3") nails as follows:
Top chords connected as follows: 2x4 - 1 row at 0-9-0 oc.
Bottom chords connected as follows: 2x4 - 1 row at 0-4-0 oc.
Webs connected as follows: 2x4 - 1 row at 0-9-0 oc.
2) All loads are considered equally applied to all plies, except if noted as front (F) or back (B) face in the LOAD CASE(S) section. Ply to ply connections have been provided to distribute only loads noted as (F) or (B), unless otherwise indicated.
3) Unbalanced floor live loads have been considered for this design.
4) Refer to girder(s) for truss to truss connections.
5) This truss is designed in accordance with the 2015 International Residential Code sections R502.11.1 and R802.10.2 and referenced standard ANSI/TPI 1.
6) Recommend 2x6 strongbacks, on edge, spaced at 10-0-0 oc and fastened to each truss with 3-10d (0.131" X 3") nails. Strongbacks to be attached to walls at their outer ends or restrained by other means.
7) Hanger(s) or other connection device(s) shall be provided sufficient to support concentrated load(s) 840 lb down at 1-6-0, 840 lb down at 3-6-0, and 840 lb down at 5-6-0, and 840 lb down at 7-6-0 on bottom chord. The design/selection of such connection device(s) is the responsibility of others.

LOAD CASE(S) Standard
1) Dead + Floor Live (balanced): Lumber Increase=1.00, Plate Increase=1.00
Uniform Loads (plf)
Vert: 6-9=-10, 1-5=-100
Concentrated Loads (lb)
Vert: 7=-840(B) 10=-840(B) 11=-840(B) 12=-840(B)

Established Basic Permit #

19-03671

Permit Number: 20-04896

Job	Truss	Truss Type	Qty	Ply	ENVISION NW
1903888F	GT02A	Floor Girder	1	2	Job Reference (optional)

Louws Truss, Inc., Ferndale, WA 98248

8.310 s Jun 26 2019 MiTek Industries, Inc. Fri Jul 12 12:34:02 2019 Page 1

ID:t9rACx?uLBlNQU_rXimwntyz1pO-O9Kcfyy52vFHeTWvU5sod1qwxButhn3umC8xq7yynJJ

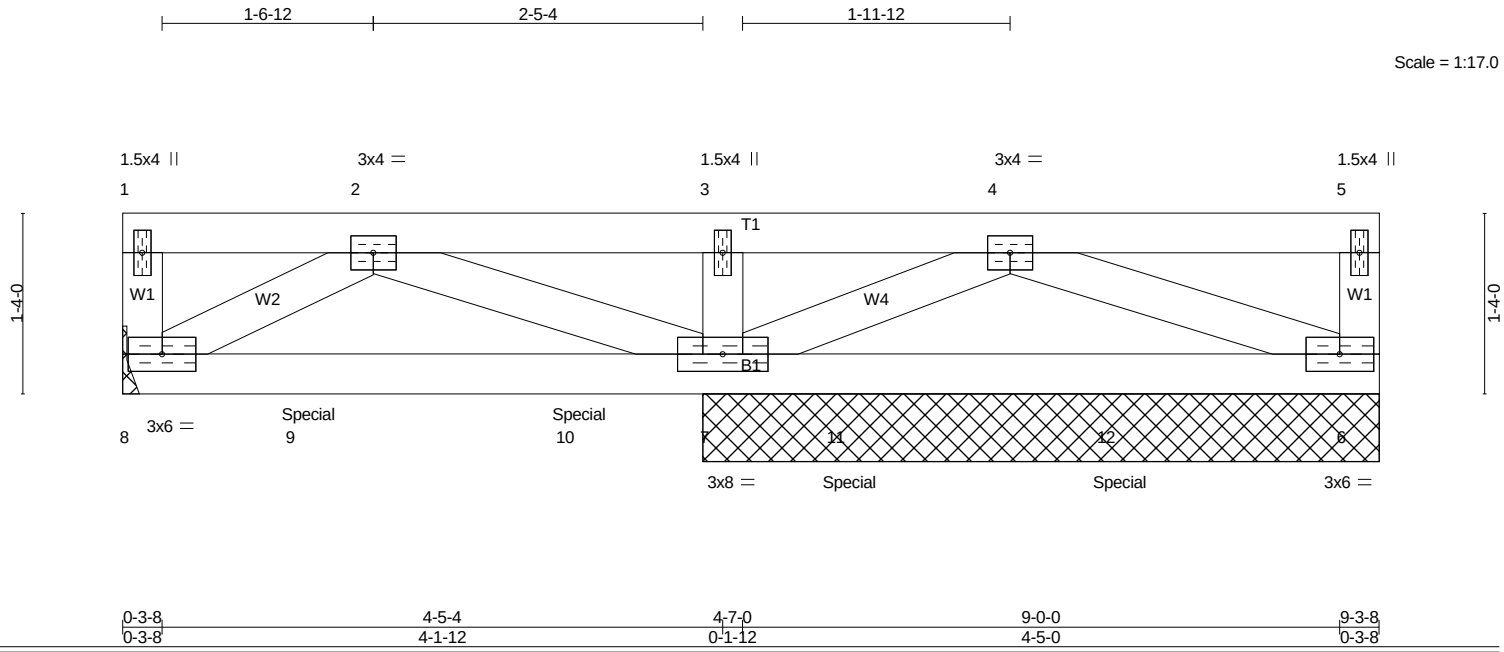

LOADING (psf)		SPACING-	2-0-0	CSI.		DEFL.	in	(loc)	l/defl	L/d	PLATES	GRIP
TCLL	40.0	Plate Grip DOL	1.00	TC	0.26	Vert(LL)	-0.05	6-7	>999	480	MT20	220/195
TCDL	10.0	Lumber DOL	1.00	BC	0.91	Vert(CT)	-0.07	6-7	>771	360		
BCLL	0.0	Rep Stress Incr	NO	WB	0.03	Horz(CT)	0.00	6	n/a	n/a		
BCDL	5.0	Code IRC2015/TPI2014		Matrix-SH							Weight: 81 lb	FT = 0%

LUMBER-
TOP CHORD 2x4 DF No.2
BOT CHORD 2x4 DF No.2
WEBS 2x4 DF No.2

BRACING-
TOP CHORD Structural wood sheathing directly applied or 6-0-0 oc purlins, except end verticals.
BOT CHORD Rigid ceiling directly applied or 10-0-0 oc bracing.

REACTIONS. (lb/size) 7=2313/5-0-0 (min. 0-1-9), 8=634/Mechanical, 6=588/5-0-0 (min. 0-1-9)
Max Grav 7=2313(LC 1), 8=655(LC 3), 6=596(LC 4)

FORCES. (lb) - Max. Comp./Max. Ten. - All forces 250 (lb) or less except when shown.
TOP CHORD 4-5=-264/0
BOT CHORD 8-9=0/336, 9-10=0/336, 7-10=0/336, 7-11=0/349, 11-12=0/349, 6-12=0/349
WEBS 3-7=-267/0, 2-7=-393/0, 4-7=-454/0

NOTES-
1) 2-ply truss to be connected together with 10d (0.131"x3") nails as follows:
Top chords connected as follows: 2x4 - 1 row at 0-9-0 oc.
Bottom chords connected as follows: 2x4 - 1 row at 0-5-0 oc.
Webs connected as follows: 2x4 - 1 row at 0-9-0 oc.
2) All loads are considered equally applied to all plies, except if noted as front (F) or back (B) face in the LOAD CASE(S) section. Ply to ply connections have been provided to distribute only loads noted as (F) or (B), unless otherwise indicated.
3) Unbalanced floor live loads have been considered for this design.
4) Refer to girder(s) for truss to truss connections.
5) This truss is designed in accordance with the 2015 International Residential Code sections R502.11.1 and R802.10.2 and referenced standard ANSI/TPI 1.
6) Recommend 2x6 strongbacks, on edge, spaced at 10-0-0 oc and fastened to each truss with 3-10d (0.131" X 3") nails. Strongbacks to be attached to walls at their outer ends or restrained by other means.
7) CAUTION, Do not erect truss backwards.
8) Hanger(s) or other connection device(s) shall be provided sufficient to support concentrated load(s) 636 lb down at 1-4-8, 636 lb down at 3-4-8, and 636 lb down at 5-4-8, and 636 lb down at 7-4-8 on bottom chord. The design/selection of such connection device(s) is the responsibility of others.

LOAD CASE(S) Standard
1) Dead + Floor Live (balanced): Lumber Increase=1.00, Plate Increase=1.00
Uniform Loads (plf)
Vert: 6-8=-10, 1-5=-100
Concentrated Loads (lb)
Vert: 9=-636(F) 10=-636(F) 11=-636(F) 12=-636(F)

Established Basic Permit #

19-03671

Permit Number: 20-04896

Job	Truss	Truss Type	Qty	Ply	ENVISION NW
1903888F	GT02B	Floor Girder	1	2	Job Reference (optional)

Louws Truss, Inc., Ferndale, WA 98248

8.310 s Jun 26 2019 MiTek Industries, Inc. Fri Jul 12 12:34:04 2019 Page 1

ID:t9rACx?uLBlNQU_rXimwntyz1pO-KYSM4e_MaWW?tmgIbWuGiSvHP_gl9gXBDVd1u0yynJH

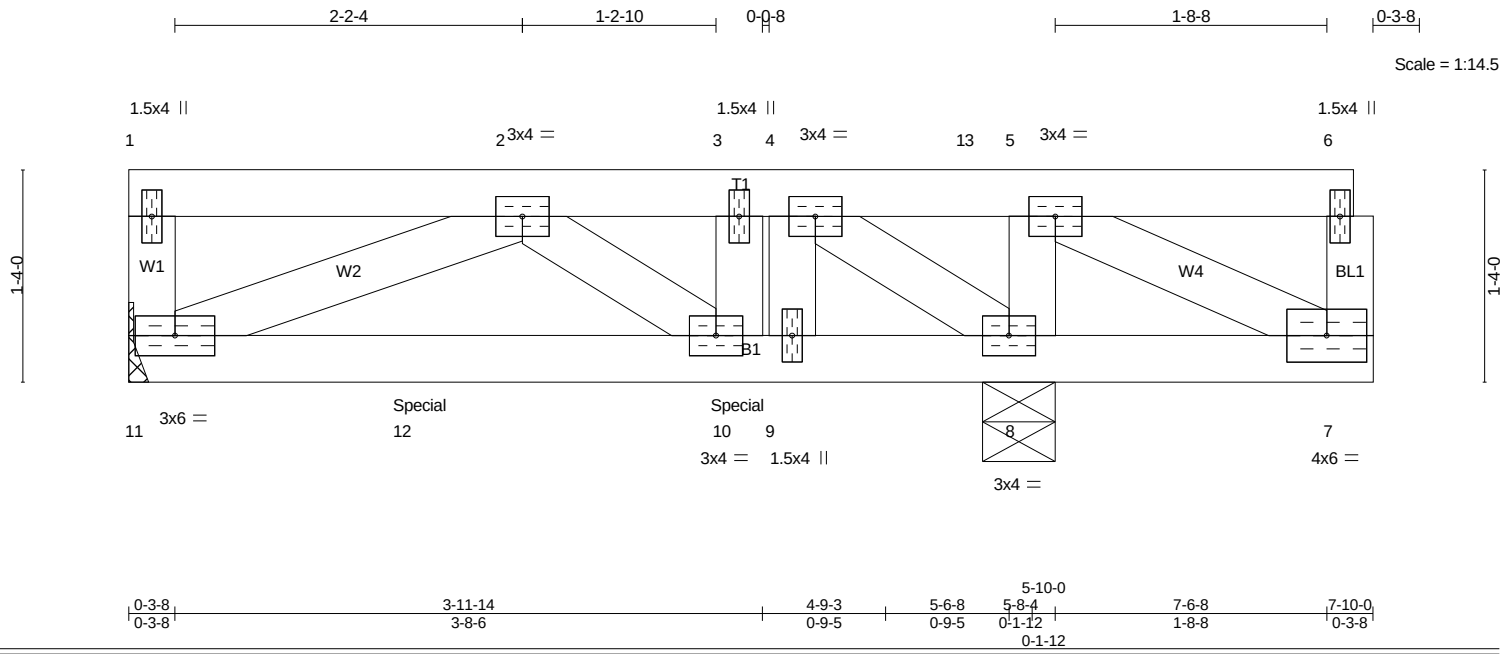

LOADING (psf)		SPACING-	2-0-0	CSI.		DEFL.	in	(loc)	l/defl	L/d	PLATES	GRIP
TCLL	40.0	Plate Grip DOL	1.00	TC	0.20	Vert(LL)	-0.03	10-11	>999	480	MT20	220/195
TCDL	10.0	Lumber DOL	1.00	BC	0.56	Vert(CT)	-0.04	10-11	>999	360		
BCLL	0.0	Rep Stress Incr	NO	WB	0.10	Horz(CT)	0.00	8	n/a	n/a		
BCDL	5.0	Code IRC2015/TPI2014		Matrix-SH							Weight: 71 lb	FT = 0%

LUMBER-
TOP CHORD 2x4 DF No.2
BOT CHORD 2x4 DF No.2
WEBS 2x4 DF No.2

BRACING-
TOP CHORD Structural wood sheathing directly applied or 6-0-0 oc purlins, except end verticals.
BOT CHORD Rigid ceiling directly applied or 10-0-0 oc bracing, Except: 6-0-0 oc bracing: 7-8.

REACTIONS. (lb/size) 8=1052/0-5-8 (min. 0-1-8), 11=781/Mechanical
Max Grav 8=1052(LC 1), 11=810(LC 3)

FORCES. (lb) - Max. Comp./Max. Ten. - All forces 250 (lb) or less except when shown.
TOP CHORD 2-3=-1170/0, 3-4=-1170/0
BOT CHORD 11-12=0/1066, 10-12=0/1066, 9-10=0/1170, 8-9=0/1170
WEBS 2-11=-983/0, 4-8=-1492/0, 2-10=0/257, 3-10=0/866

NOTES-
1) 2-ply truss to be connected together with 10d (0.131"x3") nails as follows:
Top chords connected as follows: 2x4 - 1 row at 0-9-0 oc.
Bottom chords connected as follows: 2x4 - 1 row at 0-7-0 oc.
Webs connected as follows: 2x4 - 1 row at 0-9-0 oc, Except member 10-3 2x4 - 1 row at 0-5-0 oc, member 9-4 2x4 - 1 row at 0-5-0 oc.
2) All loads are considered equally applied to all plies, except if noted as front (F) or back (B) face in the LOAD CASE(S) section. Ply to ply connections have been provided to distribute only loads noted as (F) or (B), unless otherwise indicated.
3) Unbalanced floor live loads have been considered for this design.
4) Refer to girder(s) for truss to truss connections.
5) This truss is designed in accordance with the 2015 International Residential Code sections R502.11.1 and R802.10.2 and referenced standard ANSI/TPI 1.
6) Recommend 2x6 strongbacks, on edge, spaced at 10-0-0 oc and fastened to each truss with 3-10d (0.131" X 3") nails. Strongbacks to be attached to walls at their outer ends or restrained by other means.
7) CAUTION, Do not erect truss backwards.
8) Hanger(s) or other connection device(s) shall be provided sufficient to support concentrated load(s) 502 lb down at 1-10-0, and 502 lb down at 3-10-0 on bottom chord. The design/selection of such connection device(s) is the responsibility of others.

LOAD CASE(S) Standard
1) Dead + Floor Live (balanced): Lumber Increase=1.00, Plate Increase=1.00
Uniform Loads (plf)
Vert: 7-11=-10, 1-6=-100
Concentrated Loads (lb)
Vert: 10=-502(B) 12=-502(B)

Established Basic Permit #

19-03671

Permit Number: 20-04896

Job	Truss	Truss Type	Qty	Ply	ENVISION NW
1903888F	GT01A	Floor Girder	1	2	Job Reference (optional)

Louws Truss, Inc., Ferndale, WA 98248

8.310 s Jun 26 2019 MiTek Industries, Inc. Fri Jul 12 12:33:52 2019 Page 1

ID:t9rACx?uLBlNQU_rXimwntyz1pO-hEjqYYqqPq?iRwl_u?gSDwPAt9X_LEDQTejPTiyynJT

2-5-4 | 1-10-4 | 0-0-8

Scale = 1:26.6

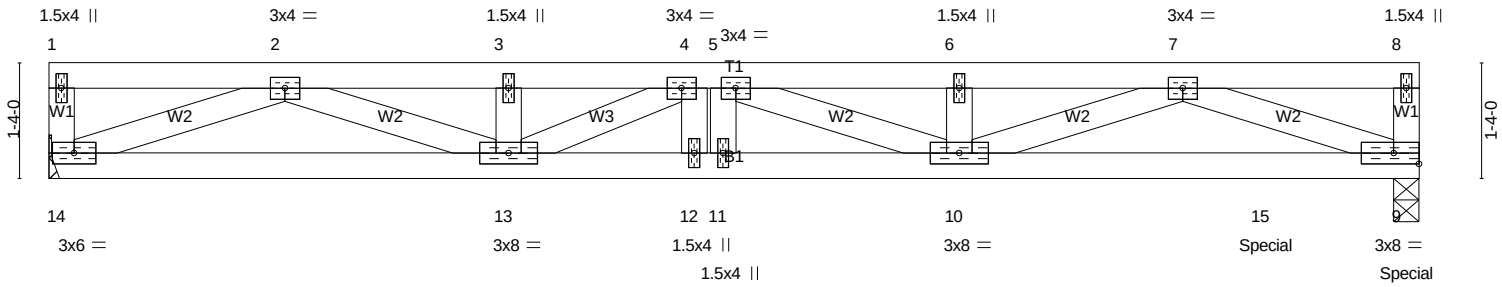

0-3-8	7-7-4	8-11-14	10-4-8	15-6-8	15-10-0
0-3-8	7-3-12	1-4-10	1-4-10	5-2-0	0-3-8

LOADING (psf)		SPACING-	2-0-0	CSI.		DEFL.	in	(loc)	l/defl	L/d	PLATES	GRIP
TCLL	40.0	Plate Grip DOL	1.00	TC	0.42	Vert(LL)	-0.13	9-10	>999	480	MT20	220/195
TCDL	10.0	Lumber DOL	1.00	BC	0.75	Vert(CT)	-0.18	9-10	>999	360		
BCLL	0.0	Rep Stress Incr	NO	WB	0.18	Horz(CT)	0.03	9	n/a	n/a		
BCDL	5.0	Code IRC2015/TPI2014		Matrix-SH							Weight: 138 lb	FT = 0%

LUMBER-
TOP CHORD 2x4 DF No.2
BOT CHORD 2x4 DF 2400F 2.0E
WEBS 2x4 DF No.2

BRACING-
TOP CHORD Structural wood sheathing directly applied or 6-0-0 oc purlins, except end verticals.
BOT CHORD Rigid ceiling directly applied or 10-0-0 oc bracing.

REACTIONS. (lb/size) 9=3928/0-3-8 (min. 0-2-2), 14=959/Mechanical

FORCES. (lb) - Max. Comp./Max. Ten. - All forces 250 (lb) or less except when shown.
TOP CHORD 2-3=-3284/0, 3-4=-3284/0, 4-5=-3824/0, 5-6=-4127/0, 6-7=-4127/0, 7-8=-440/0
BOT CHORD 13-14=0/2016, 12-13=0/3824, 11-12=0/3824, 10-11=0/3824, 10-15=0/2604, 9-15=0/2604
WEBS 7-9=-2333/0, 2-14=-2089/0, 7-10=0/1642, 2-13=0/1367, 5-10=0/739, 4-13=-752/0, 4-12=0/402, 5-11=-561/0

NOTES-
1) Special connection required to distribute bottom chord loads equally between all plies.
2) 2-ply truss to be connected together with 10d (0.131"x3") nails as follows:
Top chords connected as follows: 2x4 - 1 row at 0-9-0 oc.
Bottom chords connected as follows: 2x4 - 1 row at 0-4-0 oc.
Webs connected as follows: 2x4 - 1 row at 0-9-0 oc.
3) All loads are considered equally applied to all plies, except if noted as front (F) or back (B) face in the LOAD CASE(S) section. Ply to ply connections have been provided to distribute only loads noted as (F) or (B), unless otherwise indicated.
4) Unbalanced floor live loads have been considered for this design.
5) Refer to girder(s) for truss to truss connections.
6) This truss is designed in accordance with the 2015 International Residential Code sections R502.11.1 and R802.10.2 and referenced standard ANSI/TPI 1.
7) Recommend 2x6 strongbacks, on edge, spaced at 10-0-0 oc and fastened to each truss with 3-10d (0.131" X 3") nails. Strongbacks to be attached to walls at their outer ends or restrained by other means.
8) Hanger(s) or other connection device(s) shall be provided sufficient to support concentrated load(s) 1001 lb down at 14-0-12, and 2177 lb down at 15-8-4 on bottom chord. The design/selection of such connection device(s) is the responsibility of others.

LOAD CASE(S) Standard
1) Dead + Floor Live (balanced): Lumber Increase=1.00, Plate Increase=1.00
Uniform Loads (plf)
Vert: 9-14=-10, 1-8=-100
Concentrated Loads (lb)
Vert: 9=-2177(F) 15=-1001(B)

Established Basic Permit #

19-03671

Permit Number: 20-04896

Job	Truss	Truss Type	Qty	Ply	ENVISION NW
1903888F	GT01C	Floor Girder	1	2	Job Reference (optional)

Louws Truss, Inc., Ferndale, WA 98248

8.310 s Jun 26 2019 MiTek Industries, Inc. Fri Jul 12 12:33:57 2019 Page 1

ID:t9rACx?uLBlNQU_rXimwntyz1pO-1CXjcFuzDNd_XhdyhYGdw_7y6ACQ0Pv9cwQA9wyynJO

2-5-4 | 0-5-4 | 2-8-12 | 0-3-8

Scale = 1:32.6

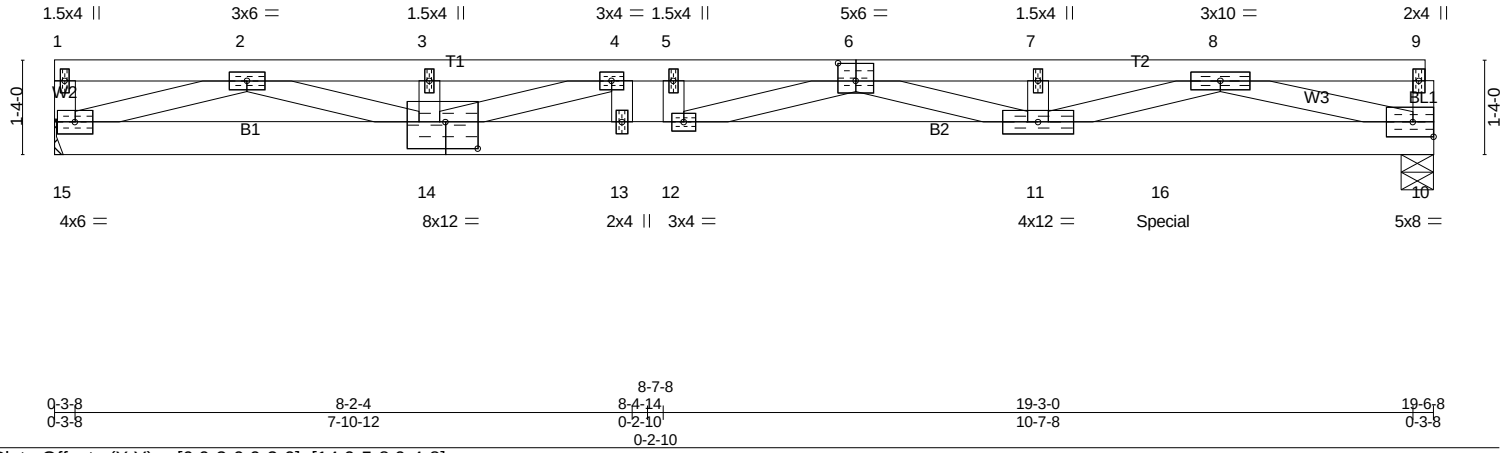

Plate Offsets (X,Y)-- [6:0-3-0,0-3-0], [14:0-5-8,0-4-8]

LOADING (psf)		**SPACING-**	2-0-0	**CSI.**		**DEFL.**	in	(loc)	l/defl	L/d	**PLATES**	**GRIP**
TCLL	40.0	Plate Grip DOL	1.00	TC	0.71	Vert(LL)	-0.34	11-12	>688	480	MT20	220/195
TCDL	10.0	Lumber DOL	1.00	BC	0.86	Vert(CT)	-0.46	11-12	>503	360		
BCLL	0.0	Rep Stress Incr	NO	WB	0.47	Horz(CT)	0.05	10	n/a	n/a		
BCDL	5.0	Code IRC2015/TPI2014		Matrix-SH							Weight: 194 lb	FT = 0%

LUMBER-
TOP CHORD 2x4 DF No.2
BOT CHORD 2x6 DF No.2 *Except*
B2: 2x6 DF 2400F 2.0E
WEBS 2x4 DF No.2

BRACING-
TOP CHORD Structural wood sheathing directly applied or 3-3-7 oc purlins, except end verticals.
BOT CHORD Rigid ceiling directly applied or 10-0-0 oc bracing.

REACTIONS. (lb/size) 10=2769/0-5-8 (min. 0-1-8), 15=1464/Mechanical

FORCES. (lb) - Max. Comp./Max. Ten. - All forces 250 (lb) or less except when shown.
TOP CHORD 2-3=-5891/0, 3-4=-5891/0, 4-5=-8052/0, 5-6=-8052/0, 6-7=-10151/0, 7-8=-10151/0, 8-9=-709/0
BOT CHORD 14-15=0/3392, 13-14=0/8052, 12-13=0/8052, 11-12=0/9657, 11-16=0/6142, 10-16=0/6142
WEBS 8-10=-5727/0, 2-15=-3422/0, 8-11=0/4276, 2-14=0/2666, 6-11=0/919, 4-14=-2372/0, 6-12=-2097/0, 4-13=0/626

NOTES-
1) 2-ply truss to be connected together with 10d (0.131"x3") nails as follows:
Top chords connected as follows: 2x4 - 1 row at 0-7-0 oc.
Bottom chords connected as follows: 2x6 - 2 rows staggered at 0-4-0 oc.
Webs connected as follows: 2x4 - 1 row at 0-9-0 oc.
2) All loads are considered equally applied to all plies, except if noted as front (F) or back (B) face in the LOAD CASE(S) section. Ply to ply connections have been provided to distribute only loads noted as (F) or (B), unless otherwise indicated.
3) Unbalanced floor live loads have been considered for this design.
4) Refer to girder(s) for truss to truss connections.
5) This truss is designed in accordance with the 2015 International Residential Code sections R502.11.1 and R802.10.2 and referenced standard ANSI/TPI 1.
6) Recommend 2x6 strongbacks, on edge, spaced at 10-0-0 oc and fastened to each truss with 3-10d (0.131" X 3") nails. Strongbacks to be attached to walls at their outer ends or restrained by other means.
7) CAUTION, Do not erect truss backwards.
8) Hanger(s) or other connection device(s) shall be provided sufficient to support concentrated load(s) 2115 lb down at 15-8-8 on bottom chord. The design/selection of such connection device(s) is the responsibility of others.

LOAD CASE(S) Standard
1) Dead + Floor Live (balanced): Lumber Increase=1.00, Plate Increase=1.00
Uniform Loads (plf)
Vert: 10-15=-10, 1-9=-100
Concentrated Loads (lb)
Vert: 16=-2115(B)

Established Basic Permit #

19-03671

Permit Number: 20-04896

Job	Truss	Truss Type	Qty	Ply	ENVISION NW
1903888F	GT02	Floor Girder	1	2	Job Reference (optional)

Louws Truss, Inc., Ferndale, WA 98248

8.310 s Jun 26 2019 MiTek Industries, Inc. Fri Jul 12 12:33:59 2019 Page 1

ID:t9rACx?uLBlNQU_rXimwntyz1pO-_bfT0xwDl_tin?nKozI5?PCO0zyZUMAS4EvGDoyynJM

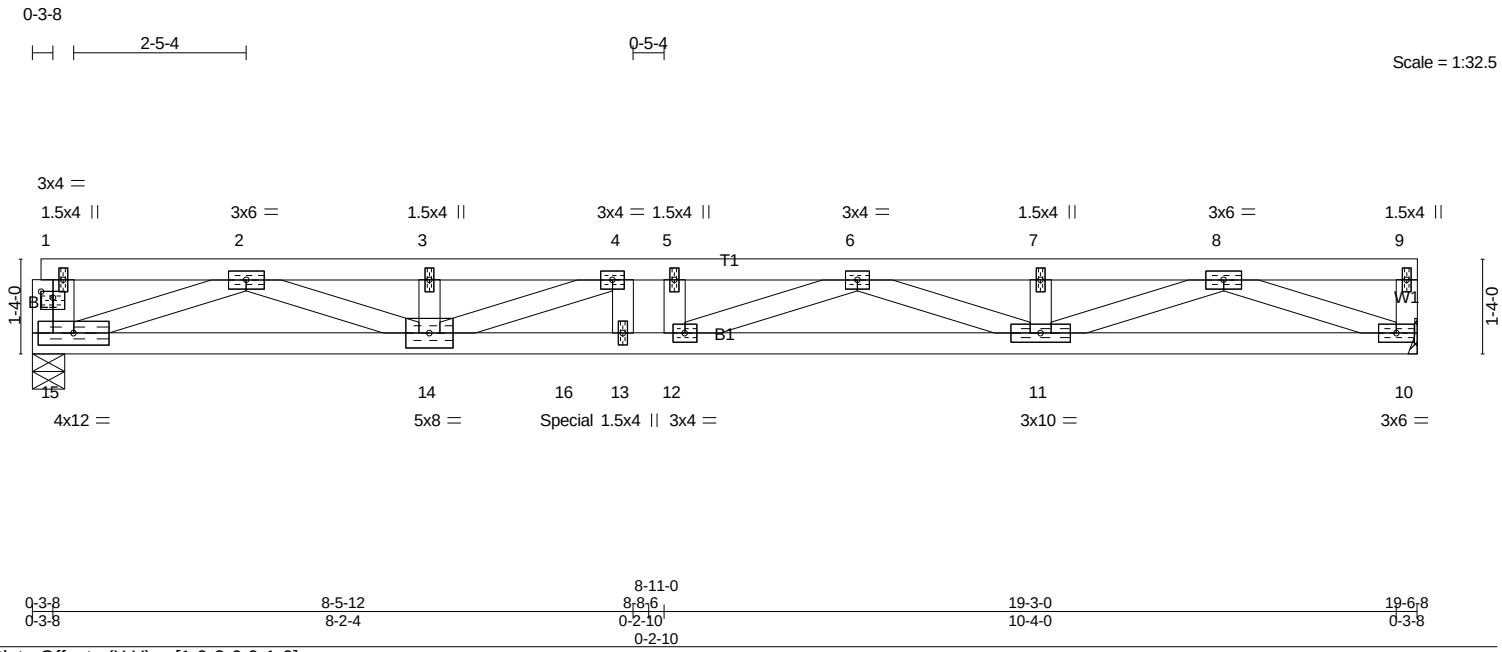

Plate Offsets (X,Y)-- [1:0-2-0,0-1-0]

LOADING (psf)		**SPACING-**	2-0-0	**CSI.**		**DEFL.**	in	(loc)	l/defl	L/d	**PLATES**	**GRIP**
TCLL	40.0	Plate Grip DOL	1.00	TC	0.37	Vert(LL)	-0.27	13	>851	480	MT20	220/195
TCDL	10.0	Lumber DOL	1.00	BC	0.63	Vert(CT)	-0.37	13	>627	360		
BCLL	0.0	Rep Stress Incr	NO	WB	0.30	Horz(CT)	0.05	10	n/a	n/a		
BCDL	5.0	Code IRC2015/TPI2014		Matrix-SH							Weight: 168 lb	FT = 0%

LUMBER-
TOP CHORD 2x4 DF No.2
BOT CHORD 2x4 DF 2400F 2.0E
WEBS 2x4 DF No.2

BRACING-
TOP CHORD Structural wood sheathing directly applied or 4-8-9 oc purlins, except end verticals.
BOT CHORD Rigid ceiling directly applied or 10-0-0 oc bracing.

REACTIONS. (lb/size) 15=1451/0-5-8 (min. 0-1-8), 10=1295/Mechanical

FORCES. (lb) - Max. Comp./Max. Ten. - All forces 250 (lb) or less except when shown.
TOP CHORD 2-3=-5855/0, 3-4=-5855/0, 4-5=-7164/0, 5-6=-7164/0, 6-7=-4910/0, 7-8=-4910/0
BOT CHORD 14-15=0/3373, 14-16=0/7164, 13-16=0/7164, 12-13=0/7164, 11-12=0/6350, 10-11=0/2828
WEBS 8-10=-2943/0, 2-15=-3478/0, 8-11=0/2245, 2-14=0/2676, 3-14=-328/0, 6-11=-1552/0, 4-14=-1546/0, 6-12=0/1297, 4-13=0/658, 5-12=-379/0

NOTES-
1) 2-ply truss to be connected together with 10d (0.131"x3") nails as follows:
Top chords connected as follows: 2x4 - 1 row at 0-7-0 oc.
Bottom chords connected as follows: 2x4 - 1 row at 0-5-0 oc.
Webs connected as follows: 2x4 - 1 row at 0-9-0 oc.
2) All loads are considered equally applied to all plies, except if noted as front (F) or back (B) face in the LOAD CASE(S) section. Ply to ply connections have been provided to distribute only loads noted as (F) or (B), unless otherwise indicated.
3) Unbalanced floor live loads have been considered for this design.
4) Refer to girder(s) for truss to truss connections.
5) This truss is designed in accordance with the 2015 International Residential Code sections R502.11.1 and R802.10.2 and referenced standard ANSI/TPI 1.
6) Recommend 2x6 strongbacks, on edge, spaced at 10-0-0 oc and fastened to each truss with 3-10d (0.131" X 3") nails. Strongbacks to be attached to walls at their outer ends or restrained by other means.
7) CAUTION, Do not erect truss backwards.
8) Hanger(s) or other connection device(s) shall be provided sufficient to support concentrated load(s) 645 lb down at 7-6-8 on bottom chord. The design/selection of such connection device(s) is the responsibility of others.

LOAD CASE(S) Standard
1) Dead + Floor Live (balanced): Lumber Increase=1.00, Plate Increase=1.00
Uniform Loads (plf)
Vert: 10-15=-10, 1-9=-100
Concentrated Loads (lb)
Vert: 16=-645(B)

Established Basic Permit #

19-03671

Permit Number: 20-04896

Job	Truss	Truss Type	Qty	Ply	ENVISION NW
1903888F	GT02C	Floor Girder	1	2	Job Reference (optional)

Louws Truss, Inc., Ferndale, WA 98248

8.310 s Jun 26 2019 MiTek Industries, Inc. Fri Jul 12 12:34:07 2019 Page 1

ID:t9rACx?uLBlNQU_rXimwntyz1pO-l77Vig0EtRuakEOtGfSzK5XkACh?M_JdvTriVKyynJE

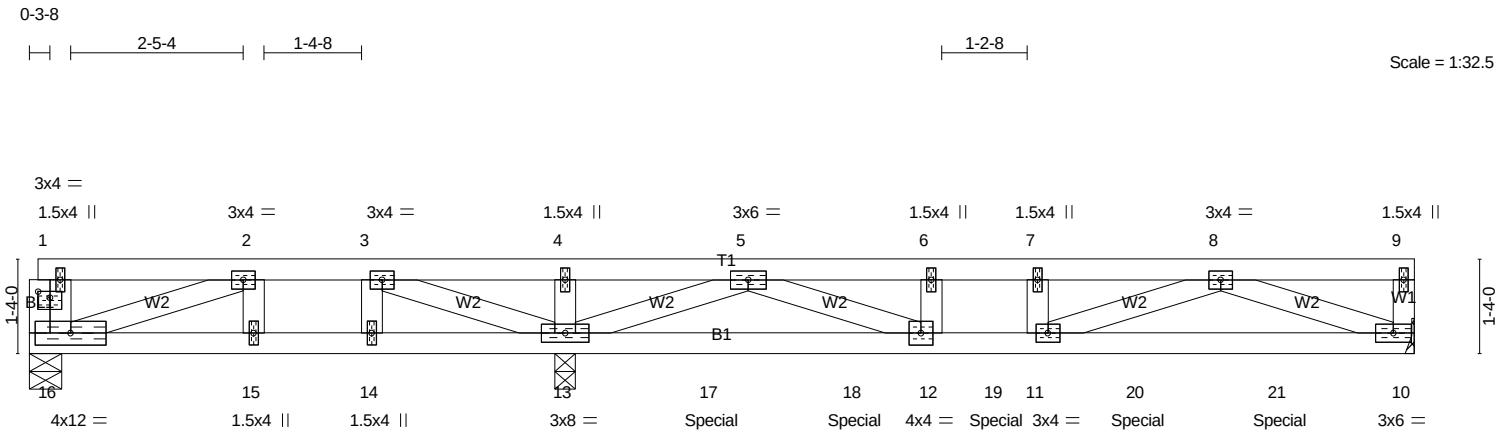

0-3-8	3-3-12	4-0-0	4-8-4	7-6-12	12-10-8	13-5-12	14-1-0	19-3-0	19-6-8
0-3-8	3-0-4	0-8-4	0-8-4	2-10-8	5-3-12	0-7-4	0-7-4	5-2-0	0-3-8

Plate Offsets (X,Y)-- [1:0-2-0,0-1-0]

LOADING (psf)		**SPACING-**	2-0-0	**CSI.**		**DEFL.**	in	(loc)	l/defl	L/d	**PLATES**	**GRIP**
TCLL	40.0	Plate Grip DOL	1.00	TC	0.42	Vert(LL)	-0.11	12-13	>999	480	MT20	220/195
TCDL	10.0	Lumber DOL	1.00	BC	0.59	Vert(CT)	-0.14	12-13	>991	360		
BCLL	0.0	Rep Stress Incr	NO	WB	0.28	Horz(CT)	0.01	10	n/a	n/a		
BCDL	5.0	Code IRC2015/TPI2014		Matrix-SH							Weight: 163 lb	FT = 0%

LUMBER-
TOP CHORD 2x4 DF No.2
BOT CHORD 2x4 DF 2400F 2.0E
WEBS 2x4 DF No.2

BRACING-
TOP CHORD Structural wood sheathing directly applied or 6-0-0 oc purlins, except end verticals.
BOT CHORD Rigid ceiling directly applied or 6-0-0 oc bracing.

REACTIONS. (lb/size) 16=76/0-5-8 (min. 0-1-8), 13=2704/0-3-8 (min. 0-1-8), 10=1294/Mechanical
Max Uplift16=-197(LC 4)
Max Grav 16=153(LC 3), 13=2704(LC 1), 10=1304(LC 4)

FORCES. (lb) - Max. Comp./Max. Ten. - All forces 250 (lb) or less except when shown.
TOP CHORD 2-3=0/939, 3-4=0/1643, 4-5=0/1643, 5-6=-3869/0, 6-7=-3869/0, 7-8=-3869/0
BOT CHORD 15-16=-939/0, 14-15=-939/0, 13-14=-939/0, 13-17=0/1526, 17-18=0/1526, 12-18=0/1526, 12-19=0/3869, 11-19=0/3869, 11-20=0/2387, 20-21=0/2387, 10-21=0/2387
WEBS 4-13=-265/0, 2-16=0/1062, 3-13=-1185/0, 8-10=-2312/0, 5-13=-3312/0, 8-11=0/1678, 5-12=0/2576

NOTES-
1) 2-ply truss to be connected together with 10d (0.131"x3") nails as follows:
Top chords connected as follows: 2x4 - 1 row at 0-9-0 oc.
Bottom chords connected as follows: 2x4 - 1 row at 0-4-0 oc.
Webs connected as follows: 2x4 - 1 row at 0-9-0 oc.
2) All loads are considered equally applied to all plies, except if noted as front (F) or back (B) face in the LOAD CASE(S) section. Ply to ply connections have been provided to distribute only loads noted as (F) or (B), unless otherwise indicated.
3) Unbalanced floor live loads have been considered for this design.
4) Refer to girder(s) for truss to truss connections.
5) Provide mechanical connection (by others) of truss to bearing plate capable of withstanding 197 lb uplift at joint 16.
6) This truss is designed in accordance with the 2015 International Residential Code sections R502.11.1 and R802.10.2 and referenced standard ANSI/TPI 1.
7) Recommend 2x6 strongbacks, on edge, spaced at 10-0-0 oc and fastened to each truss with 3-10d (0.131" X 3") nails. Strongbacks to be attached to walls at their outer ends or restrained by other means.
8) CAUTION, Do not erect truss backwards.
9) Hanger(s) or other connection device(s) shall be provided sufficient to support concentrated load(s) 800 lb down at 9-7-8, 293 lb down at 11-7-12, 293 lb down at 13-7-12, and 293 lb down at 15-7-12, and 293 lb down at 17-7-12 on bottom chord. The design/selection of such connection device(s) is the responsibility of others.

LOAD CASE(S) Standard
1) Dead + Floor Live (balanced): Lumber Increase=1.00, Plate Increase=1.00
Uniform Loads (plf)
Vert: 10-16=-10, 1-9=-100

Continued on page 2

Established Basic Permit #

19-03671

Permit Number: 20-04896

LOAD CASE(S) Standard
Concentrated Loads (lb)
Vert: 17=-800(B) 18=-293(B) 19=-293(B) 20=-293(B) 21=-293(B)

Established Basic Permit #

19-03671

Permit Number: 20-04896