CLIENT

ENVISION NORTHWEST, LLC
AUSTIN ROUPE
10829 NE 68TH STREET, SUITE B
KIRKLAND, WA 98033

ARCHITECT

ADM ARCHITECTURE, LLC
AARON MURPHY, ARCHITECT
5819 NE MINDER ROAD, SUITE "G"
POULSBO, WA 98370

DRAWING INDEX

S1.0 STRUCTURAL NOTES & PROJECT INFORMATION
S1.1 STRUCTURAL SCHEDULES
S2.0 SHEARWALL & HOLDOWN PLANS & SCHEDULES
S2.1 FOUNDATION/FIRST FLOOR PLAN
S2.1A ALTERNATE FOUNDATION/FIRST FLOOR PLAN
S2.2 SECOND FLOOR FRAMING PLAN
S2.2A ALTERNATE SECOND FLOOR FRAMING PLAN
S2.3 THIRD FLOOR ROOF FRAMING PLAN
S2.3A ALTERNATE THIRD FLOOR FRAMING PLAN
S2.4 UPPER ROOF FRAMING PLAN
S3.0 SECTIONS & DETAILS
S3.1 SECTIONS & DETAILS
S3.2 SECTIONS & DETAILS
S3.3 SECTIONS & DETAILS
S3.4 TYPICAL SECTIONS & DETAILS

PACIFIC NORTHWEST STRUCTURAL GROUP, INC
A PROFESSIONAL ENGINEERING COMPANY
6193 NE MALBON CT.
KINGSTON, WA 98346
360.903.2803

Reviewed for code compliance with IRC 2015 Kitsap County Building Department Iasmith@co.kitsap.wa.us 11/16/2020

revised

BASIC PERMIT PACKAGE
REVIEWED FOR CODE COMPLIANCE
WITH IRC 2015
KITSAP COUNTY BUILDING DEPARTMENT

Validity of permit. The issuance or granting of a permit shall not be construed to be a permit for, or an approval of, any violation of any of the provisions of the International Codes or any other ordinance of Kitsap County. Permits presuming to give authority to violate or cancel the provisions of the International Codes and ordinances of Kitsap County shall not be valid. IBC & IRC 105

Must Comply With All Washington State Codes

Subject To Field Inspection

CHANGES MUST Be Approved Prior To Performing Work

1
2

STRUCTURAL NOTES

GOVERNING DESIGN CODE

1. 2015 INTERNATIONAL BUILDING CODE WITH WASHINGTON STATE AMENDMENTS.

DESIGN CRITERIA

1. DESIGN LIVE AND SNOW LOADS FOR NEW CONSTRUCTION, UNLESS NOTED OTHERWISE:
2. LIVE LOADS:
   - ROOF 20 PSF MINIMUM ROOF LIVE LOAD (REDUCIBLE)
   - RESIDENTIAL FLOORS 40 PSF
   - DECKS 60 PSF
3. SNOW LOADS:
   - ROOF SNOW LOAD, P_g: 25 PSF
   - GROUND SNOW LOAD, P_G: 30 PSF
   - FLAT ROOF SNOW LOAD, P_f: 21 PSF
   - SNOW EXPOSURE "B"
   - EXPOSURE FACTOR, C_E: 1.0
   - IMPORTANCE FACTOR, I: 1.0
   - THERMAL FACTOR, C_T: 1.0
5. SUPERIMPOSED DEAD LOADS
   - ROOF: 15 PSF
   - FLOOR: 15 PSF
6. WIND DESIGN DATA:
   - ALTERNATE ALL-HEIGHTS METHOD - 2015 UBC 1609.6
   - ULTIMATE WIND SPEED 110 MPH
   - EXPOSURE "B"
   - WIND DIRECTIONALITY FACTOR, K_d: 0.85
   - TOPOGRAPHIC FACTOR, K_{zt}: 1.0
   - VELOCITY PRESSURE FACTOR, K_z: 0.65
7. EARTHQUAKE DESIGN DATA:
   - SEISMIC DESIGN CATEGORY: D
   - SEISMIC RISK CATEGORY II
   - IMPORTANCE FACTOR, I: 1.0
   - BASIC SEISMIC-FORCE RESISTING SYSTEMS(S)
   - BEARING WALL SYSTEM - LIGHT FRAME WALLS SHEATHED WITH WOOD STRUCTURAL PANELS RATED FOR SHEAR RESISTANCE.
   - SOIL SITE CLASS D
   - MAPPED RESPONSE ACCELERATIONS; S_S: 1.39, S_D: 0.55. SPECTRAL RESPONSE COEFFICIENTS; S_{DS}: 0.93, S_{D1}: 0.55
   - SEISMIC RESPONSE COEFFICIENT(S), C_S: 0.14
   - RESPONSE MODIFICATION FACTOR(S), R: 6.5

GENERAL NOTES

1. THESE STRUCTURAL NOTES ARE A SUPPLEMENT TO THE SPECIFICATIONS.
2. SPECIFICATIONS AND CODES REFERENCED IN THESE NOTES ARE THE VERSIONS MOST RECENTLY ADOPTED BY THE PERMITTING AUTHORITY.
3. VERIFY DIMENSIONS AND CONDITIONS WITH THE ARCHITECTURAL DRAWINGS. FIELD VERIFY DIMENSIONS AND ELEVATIONS RELATIVE TO THE EXISTING STRUCTURE PRIOR TO FABRICATION OF MATERIALS.
4. FOR FEATURES OF CONSTRUCTION NOT FULLY SHOWN, PROVIDE THE SAME TYPE AND CHARACTER AS SHOWN FOR SIMILAR CONDITIONS, SUBJECT TO REVIEW BY THE ARCHITECT AND ENGINEER OF RECORD.
5. APPLY, PLACE, ERECT OR INSTALL ALL PRODUCTS AND MATERIALS IN ACCORDANCE WITH THE MANUFACTURER'S INSTRUCTIONS.
6. ADEQUATELY BRACE STRUCTURE AND ALL STRUCTURAL COMPONENTS AGAINST WIND, LATERAL EARTH AND SEISMIC FORCES UNTIL THE PERMANENT LATERAL-FORCE RESISTING SYSTEMS HAVE BEEN INSTALLED.
7. PROVIDE BLOCKING BETWEEN STUDS (OR OTHER MEANS OF BRACING) AT WOOD BEARING WALLS TO PREVENT STUD BUCKLING PRIOR TO INSTALLATION OF GYPSUM WALLBOARD.

SITE PREPARATION

1. REMOVE VEGETATION, RUBBISH AND EXISTING FILL WITHIN BUILDING FOOTPRINT AND 5-0" (MINIMUM) BEYOND THE FOOTPRINT. STRIP TOP SOIL 6", MINIMUM.
2. PRE-ROLL AREA WITHIN BUILDING FOOTPRINT AND 5'-0" (MINIMUM) BEYOND THE FOOTPRINT WITH A HEAVY VIBRATORY ROLLER OR LOADED DUMP TRUCK. MAKE THREE PASSES (MINIMUM) OVER THE ENTIRE AREA.
3. REMOVE AREAS OF SOIL, AS REQUIRED, THAT EXHIBIT EXCESSIVE WEAVING OR DEFLECTION UNDER THE WEIGHT OF THE ROLLER OR DUMP TRUCK.
4. BACK-FILL EXCAVATED AREAS WITH STRUCTURAL FILL AS DESCRIBED BELOW.
5. CONSULT THE FOUNDATION INVESTIGATION REPORT, AVAILABLE AT ARCHITECT'S OFFICE, FOR ADDITIONAL INFORMATION.

STRUCTURAL FILL OR BACK-FILL

1. STRUCTURAL FILL MATERIAL:
   - SAND AND GRAVEL MIXTURE OR CRUSHED ROCK.
   - WELL GRADED FROM COARSE-TO-FINE WITH LESS THAN 10% BY WEIGHT OF THE MINUS 3/4" FRACTION PASSING THE NO. 200 SIEVE.
   - FREE OF ORGANICS, RUBBISH, CLAY BALLS AND ROCKS LARGER THAN 4".
   - PLACE STRUCTURAL FILL IN LOOSE LIFTS, MAXIMUM OF 8" IN THICKNESS.
   - COMPACT STRUCTURAL FILL TO A MINIMUM DENSITY OF 95% OF MAXIMUM DRY DENSITY, AS DETERMINED BY ASTM D 1557.
   - VERIFY ADEQUACY OF STRUCTURAL FILL COMPACTION WITH RANDOM FIELD DENSITY TESTS.

FOUNDATIONS

1. FOUNDATION SIZES BASED ON AN ALLOWABLE SOIL BEARING PRESSURE OF 2,500 PSF DEAD AND LIVE LOADS.
2. FOUNDATION ELEVATIONS WHERE SHOWN ARE TO TOP OF FOOTINGS.
3. PLACE FOOTINGS ON FIRM, UNDISTURBED ORIGINAL SOIL, OR ON STRUCTURAL FILL. SEE "STRUCTURAL FILL OR BACK-FILL" NOTES FOR STRUCTURAL FILL INFORMATION.
4. LOCATE BOTTOM OF FOOTINGS AT A MINIMUM OF 1'-0" BELOW FINAL GRADE OR 1'-0" BELOW EXISTING GRADE, WHICHEVER IS LOWER.
5. PRIOR TO PLACEMENT OF CONCRETE, REMOVE ALL DISTURBED SOIL FROM FOOTING EXCAVATION TO NEAT LINES.
6. STEP BOTTOM OF FOOTINGS FROM ELEVATION TO ELEVATION AT A RATIO OF 1 VERTICAL TO 2 HORIZONTAL, WITH A MAXIMUM VERTICAL STEP OF 2'-0".

CONCRETE REINFORCING STEEL

1. REINFORCING STEEL (TYPICAL, UNLESS NOTED OTHERWISE): ASTM A 615, GRADE 60.
2. DETAIL, FABRICATE AND PLACE REINFORCING ACCORDING TO ACI 315, "DETAILS AND DETAILING OF CONCRETE REINFORCEMENT".
3. TYPICAL REINFORCING (MINIMUM, UNLESS NOTED OTHERWISE ON DRAWINGS):
   - CORNERS AND INTERSECTIONS OF WALLS AND FOUNDATIONS: CORNER BARS EQUAL IN SIZE AND NUMBER TO HORIZONTAL REINFORCING. LEG LENGTH: 48 BAR DIAMETERS (2'-0" MINIMUM).
4. DO NOT FIELD BEND, DISPLACE, WELD, HEAT OR CUT REINFORCING UNLESS INDICATED ON THE DRAWINGS, OR APPROVED BY ENGINEER OF RECORD.
5. PLACE ELECTRICAL CONDUIT NEAR CENTER OF ELEVATED SLAB.
6. SPLAY REINFORCING AROUND SLAB OPENINGS WITH 1" IN 10" SPLAY, UNLESS NOTED OTHERWISE.
7. MINIMUM COVER FROM CONCRETE SURFACES TO REINFORCING:
   - 3 ± 1/2" TO BOTTOM OF FOOTING
   - 2" ± 1/4" TO EARTH FACE OF WALL
   - 1" ± 1/4" TO INSIDE FACE OF WALL
   - 3/4" SLAB TO TOP AND BOTTOM SURFACES
8. CENTER OF SLABS-ON-GRADE
9. REINFORCING LAP SPLICES: CONFORM WITH ACI 318 "BUILDING CODE REQUIREMENTS FOR REINFORCED CONCRETE", 2-FEET, UNLESS NOTED OTHERWISE ON DRAWINGS:

CAST-IN-PLACE CONCRETE

1. PROVIDE CONCRETE MATERIALS, FORM WORK, MIXING, PLACING AND CURING ACCORDING TO ACI 301, "STANDARD SPECIFICATION FOR STRUCTURAL CONCRETE".
2. CONCRETE MIX DESIGNS: F'_C = 3,000 PSI

1

ANCHORS IN CONCRETE

1. CAST-IN-PLACE ANCHORS SHALL BE ACCURATELY AND SECURELY PLACED.
   - ANCHOR BOLTS; BOLTS WITH ROLLED THREADS, ANCHOR BOLT NUTS: CONFORM WITH ASTM A194, ASTM A307 MATERIAL HOT-DIPPED GALVANIZED ACCORDING TO ASTM A153.
   - UNLESS NOTED OTHERWISE ON PLANS PROVIDE ⅝" Ø x 7" EMBEDMENT WITH ¼" x3" SQ PL WASHERS AT MAXIMUM 72" ON-CENTER SPACING AT FOUNDATION SILL PLATES. SIMPSON STRONG-TIE MASA OR MASAP MUDSILL ANCHORS MY BE USED IN-LIEU-OF ANCHOR BOLTS AND PLATE WASHERS. SEE SHEARWALL SCHEDULE FOR SPACING.
2. INSTALL ACCORDING TO MANUFACTURER'S RECOMMENDATIONS & WITH IBC SPECIAL INSPECTION ACCORDING TO SPECIAL INSPECTION PROGRAM.
   - MECHANICAL ANCHORS: ICC-APPROVED; CONFORM WITH FF-S-325, GROUP II, TYPE 4, CLASS 1. MATERIAL: (ZINC PLATED ACCORDING TO ASTM B 633, HOT-DIPPED GALVANIZED ACCORDING TO ASTM A 153, OR AISI 304 STAINLESS STEEL). UNLESS NOTED OTHERWISE ON PLANS EMBED MECHANICAL ANCHORS 4" MINIMUM INTO CONCRETE.
   - ACCEPTABLE ANCHORS: "KWIK-BOLT TZ", BY HILTI FASTENING SYSTEMS, INC, "STRONG BOLT 2" BY SIMPSON STRONG-TIE COMPANY, INC.,
   - ADHESIVE ANCHORS (CONCRETE): ICC APPROVED. ANCHOR COMPONENTS: ALL-THREAD ROD, NUT, WASHER AND ADHESIVE INJECTION GEL SYSTEM. ANCHOR RODS: RODS WITH ROLLED THREADS. ANCHOR ROD NUTS: CONFORM WITH ASTM A 194. ASTM A 36 MATERIAL HOT-DIPPED GALVANIZED ACCORDING TO ASTM A 153.
   - ACCEPTABLE ADHESIVE INJECTION GEL SYSTEMS:
     - "SET", BY SIMPSON STRONG-TIE COMPANY, INC.
     - "HIT HY 200 SAFE", BY HILTI FASTENING SYSTEMS, INC.

FRAMING LUMBER

1. LUMBER SPECIES: DOUGLAS FIR-LARCH GRADE LUMBER ACCORDING TO RULES OF WEST COAST LUMBER INSPECTION BUREAU (WCLIB).
2. LUMBER GRADES:
   - EXTERIOR WALL STUDS NO. 1
   - INTERIOR BEARING WALL STUDS NO. 1
   - JOISTS NO. 1
   - BEAMS NO. 1
   - POSTS NO. 1
   - BLOCKING, PLATES, BRIDGING .....STANDARD OR BETTER OR STUD GRADE
3. MAXIMUM MOISTURE CONTENT: 19% AT 3x OR LESS (LEAST DIMENSIONS) MEMBERS.
4. PROVIDE SOLID BLOCKING (SAME DEPTH OF MEMBER) AT ALL POINTS OF BEARING (MAXIMUM SPACING OF 8'-0" ON-CENTER), AT JOISTS WITH A 5:1 OR GREATER DEPTH-TO-THICKNESS RATIO OR WHERE ONE EDGE OF JOIST IS NOT ATTACHED TO SHEATHING, WALLBOARD, BRACING, ETC.
5. MEMBER DIMENSIONS INDICATED ARE STANDARD NOMINAL UNLESS NOTED OTHERWISE.
6. WOOD IN CONTACT WITH CONCRETE OR MASONRY ACCORDING TO AWPA STANDARD C-2. LABEL PRESERVATIVE-TREATED LUMBER WITH THE AWPB (AMERICAN WOOD PRESERVERS BUREAU) QUALITY MARK.
7. DOUBLE ALL FLOOR JOISTS UNDER ALL PARALLEL PARTITIONS.
8. SEE SCHEDULE AND DRAWINGS FOR FASTENING.

GLUE LAMINATED MEMBERS

1. MEMBER SPECIES: WESTERN; MEMBER GRADE: SIMPLE SPANS; 24F-V4; CONTINUOUS OR CANTILEVERED SPANS: 24F-V8.
2. MATERIAL STANDARDS: ALLOWABLE STRESSES: AITC 117. ARCHITECTURAL APPEARANCE GRADE: AITC 110-2001. MANUFACTURE AND FABRICATION: AITC A190.1. FABRICATE WITH WATERPROOF GLUES. SHAPE TOP OF MEMBERS TO ROOF SLOPE. ADD LAMINATIONS AS REQUIRED FOR SHAPING. PROVIDE STANDARD 3500 FOOT RADIUS CAMBER, UNLESS NOTED OTHERWISE ON DRAWINGS. IDENTIFY MEMBERS WITH THE APA-EWS MARK OF AMERICAN WOOD SYSTEMS OR MEMBER INSPECTION IS REQUIRED BY AN INDEPENDENT TESTING LAB. ERECT MEMBERS ACCORDING TO AITC SPECIFICATIONS.

PLYWOOD SHEATHING

1. PLYWOOD MATERIAL: GRADE: C-D, UNLESS NOTED OTHERWISE. MANUFACTURED WITH EXTERIOR GLUE ACCORDING TO UNITED STATES PRODUCT STANDARD PS 1-83/ANSI AL 99.1. CONFORM WITH APA PRODUCT STANDARD PS 1-07. SHALL BEAR THE AMERICAN PLYWOOD ASSOCIATION (APA) TRADEMARK. SUBSTITUTION OF ORIENTED STRAND BOARD (OSB) FOR PLYWOOD IS ACCEPTABLE IF THE OSB: CONFORMS WITH APA PS 2-04, GRADE 2-M-W. MANUFACTURED WITH EXTERIOR GLUE. LOAD/SPAN RATING INDEX EQUAL TO PLYWOOD. BEARS THE APA TRADEMARK.
2. PROVIDE PRESSURE-TREATED PLYWOOD WHERE INDICATED ON DRAWINGS. CONFORM WITH AWPA STANDARD C-9. MARK SHEETS WITH AWPB
   - SHEATHING TYPES:
     - ROOF SHEATHING: $^{15}/_{32}$" INDEX $^{32}/_{16}$
     - FLOOR: ¾" INDEX $^{48}/_{24}$ T&G MINIMUM.
     - WALLS: $^{15}/_{32}$" INDEX $^{32}/_{16}$
3. PLYWOOD LAYOUT AND INSTALLATION: LAY OUT PLYWOOD SHEATHING WITH END JOINTS STAGGERED, UNLESS NOTED OTHERWISE. LAY OUT PLYWOOD TO ELIMINATE WIDTHS LESS THAN 2'-0" UNLESS ALL EDGES OF UNDERSIZED PIECES ARE SUPPORTED BY BLOCKING. PROVIDE PANEL SPACING ACCORDING TO APA RECOMMENDATIONS. BLOCK SHEAR WALL SHEATHING WITH 2x4 FLAT BLOCKING AT ALL EDGES. FASTEN ACCORDING TO SCHEDULE AND DRAWINGS.
4. PROTECT FLOOR AND ROOF SHEATHING FROM EXTREME WET CONDITIONS.

ENGINEERED WOOD PRODUCTS

1. CONFORM WITH ALL APPLICABLE PROVISIONS OF THE IBC.
2. WOOD PRODUCT MANUFACTURER: TRUS JOIST, A WEYERHAEUSER BUSINESS, OR APPROVED.
3. TJI SERIES JOISTS:
   - FURNISH ALL END AND INTERMEDIATE STIFFENERS, BLOCKING AND/OR SHEAR PANELS, METAL BRIDGING ASSEMBLIES AND HANGERS, AS REQUIRED TO PROVIDE A COMPLETE FLOOR OR ROOF STRUCTURAL SYSTEM. TOP AND BOTTOM CHORDS OF TJI JOISTS SHALL BE MANUFACTURED FROM LVL MATERIAL AND SHALL BE EQUAL TO OR GREATER DIMENSION THAN THE TRUS JOIST, A WEYERHAEUSER BUSINESS SERIES INDICTED ON THE DRAWINGS. DEPTH(S) OF JOIST(S) OR JOIST(S) SPACING MAY NOT BE CHANGED WITHOUT PRIOR WRITTEN APPROVAL OF THE STRUCTURAL ENGINEER OF RECORD.
4. PARALLEL STRAND LUMBER "PSL".
   - BEAM, HEADER, BLOCKING: 2.0E GRADE OTHERWISE NOTED ON PLANS
5. LAMINATED STRAND LUMBER "LSL".
   - RIM BOARD: 1 ¾" WIDE, 1.3E GRADE OTHERWISE NOTED ON PLANS.
   - BEAM, HEADER, BLOCKING: 1.5E GRADE OTHERWISE NOTED ON PLANS.
   - STUDS: 1 ½" WIDE, 1.5E GRADE.
   - FOUNDATION SILL PLATES: STRANDGUARD 1.3E GRADE
7. SLOPED BEARING REQUIREMENTS: JOIST SUPPLIER AND CONTRACTOR TO COORDINATE.
8. DOUBLE ALL JOISTS UNDER MECHANICAL UNITS, UNLESS NOTED OTHERWISE.
9. DO NOT NOTCH OR DRILL STRUCTURAL MEMBERS, EXCEPT AS APPROVED BY THE ENGINEER OF RECORD PRIOR TO INSTALLATION.

FASTENING AND CONNECTIONS

1. PROVIDE THE MINIMUM NUMBER OF FASTENERS PER THE FASTENER SCHEDULE FOR WOOD MEMBERS, UNLESS NOTED OTHERWISE ON DRAWINGS.
2. SIMPSON STRONG-TIE CONNECTORS IN CONTACT WITH PRESERVATIVE-TREATED WOOD, FIRE-RETARDANT-TREATED WOOD OR EXPOSED TO EXTERIOR SHALL BE ZMAX, HDG OR SST300. FOLLOW SIMPSON STRONG-TIE RECOMMENDATIONS FOR SELECTING CORROSION RESISTANT CONNECTORS.
3. PROVIDE GRACE VYCOR® DECK PROTECTOR IN-LIEU-OF CORROSION RESISTANT TREATMENTS FOR CONNECTORS IN CONTACT WITH PRESERVATIVE-TREATED WOOD, FIRE-RETARDANT-TREATED WOOD AT INTERIOR APPLICATIONS, UNLESS NOTED OTHERWISE ON PLANS.
4. FASTENERS IN PRESERVATIVE-TREATED OR FIRE-RETARDANT-TREATED WOOD SHALL COMPLY WITH ASTM A153 AND SHALL BE HOT-DIPPED ZINC-COATED GALVANIZED STEEL, STAINLESS STEEL, SILICON BRONZE OR COPPER.
5. NAIL TYPE: COMMON OR SINKER, UNLESS NOTED OTHERWISE ON DRAWINGS.
6. SEE FASTENER SCHEDULE FOR FASTENER SIZE AND LOCATION.

PLYWOOD SHEATHING CONNECTIONS

1. ROOF SHEATHING
   - BLOCK ALL EDGES WITH 2x4 FLATS
   - FASTENING: ALL NAILS COMMON UNLESS NOTED OTHERWISE
     - AT EDGES OF EACH SHEET, BLOCKING & WALLS .....8D AT 6" OC
     - AT INTERIOR OF SHEETS.....8D AT 12" OC
     - AT BOUNDARIES OF ROOF .....8D AT 6" OC
2. FLOOR SHEATHING
   - IMMEDIATELY PRIOR TO PLACING PANELS, APPLY A ¼" DIAMETER CONTINUOUS BEAD OF CONSTRUCTION ADHESIVE, CONFORMING WITH AFG-01, TO TOPS OF ALL JOISTS, BLOCKING AND PLATES.
   - FASTENING: ALL NAILS COMMON UNLESS NOTED OTHERWISE. SIMPSON STRONG-TIE "QUICK DRIVE" WSNTL212S SCREWS MAY BE USED IN-LIEU-OF COMMON NAILS, AT SAME SPACING INDICATED BELOW.
     - AT EDGES OF EACH SHEET, BLOCKING & WALLS .....10D AT 6" OC
     - AT INTERIOR OF SHEETS .....10D AT10"OC
     - AT BOUNDARIES OF FLOOR .....10D AT 6" OC
3. WALL SHEATHING
   - BLOCK ALL EDGES NOT SUPPORTED BY FRAMING MEMBERS WITH 2x4 FLATS, MIN.
   - FASTENING: ALL NAILS COMMON UNLESS NOTED OTHERWISE
     - AT EDGES OF EACH SHEET, BLOCKING & WALLS .....8D AT 6" OC
     - AT INTERIOR OF SHEETS.....8D AT 12" OC
     - AT BOUNDARIES OF ROOF .....8D AT 6" OC

LIGHT-METAL PLATE-CONNECTED WOOD TRUSSES

1. DESIGN TRUSS SYSTEM ACCORDING TO PROVISIONS OF "DESIGN SPECIFICATIONS FOR LIGHT METAL PLATE CONNECTED WOOD TRUSSES", BY THE TRUSS PLATE INSTITUTE, UNLESS NOTED OTHERWISE.
2. TRUSS DESIGN CRITERIA:
   - ROOF TRUSSES:
     - DEAD LOAD: 15 PSF
     - SNOW LIVE LOAD: 25 PSF
     - WIND UPLIFT LOAD: 18.1 PSF ZONE 1, 22.9 PSF ZONE 2, & 44.7 PSF ZONE 3
     - LIVE LOAD DEFLECTION: L/360, MAX
   - FLOOR TRUSSES:
     - DEAD LOAD: 15 PSF
     - LIVE LOAD: 40 PSF AT FLOORS & 60 PSF AT DECKS
     - LIVE LOAD DEFLECTION: L/600, MAX
     - PROVIDE TRUSS AND COMPRESSIVE MEMBER LATERAL BRACING AND CONNECTIONS FOR CONSTRUCTION AND PERMANENT LOADS, INCLUDING BRACING FOR WIND UPLIFT.
3. CONNECTION PLATE DESIGN: DEVELOP FULL DESIGN STRESS IN A MEMBER. PROVIDE A MINIMUM TRANSFER AT ANY MEMBER OF 2,000 POUNDS.
4. SHOP DRAWINGS:
   - INCLUDE ERECTION PLAN SHOWING LATERAL BRACING FOR TRUSS COMPRESSIVE MEMBERS AND REQUIRED BRACING CONNECTIONS.
   - SUBMIT TRUSS DESIGN CALCULATIONS SHOWING MEMBER FORCES AND COMBINED STRESSES.
   - SUBMIT ICC APPROVAL INFORMATION.
5. SUBMIT CERTIFICATES FROM AN INDEPENDENT INSPECTION COMPANY ASSERTING THAT TRUSSES DELIVERED TO PROJECT SITE CONFORM WITH APPROVED SHOP DRAWINGS SUBMIT INSPECTION CERTIFICATES PRIOR TO START OF ERECTION.
6. CONNECT TRUSSES TO SUPPORTING MEMBERS WITH ONE SIMPSON H1 ANCHOR & TWO 10D TOE NAILS, UNLESS NOTED OTHERWISE.
7. DOUBLE TRUSSES UNDER MECHANICAL UNITS, UNLESS NOTED OTHERWISE.

DIGITAL SIGNATURE

Digitally signed by David L. Starkel
Date: 2020.05.29 10:44:05 -07'00'

RED BARN LANE - DUPLEX 1880/1620A
NW HOGAN LN & NELS NELSON RD NW
BREMERTON, WA 98311
STRUCTURAL NOTES & PROJECT INFORMATION

DAVID L. STARKEL
STATE OF WASHINGTON
40303
REGISTERED
PROFESSIONAL ENGINEER

REVISIONS	
1	03-DEC-19
2	08-APR-20

DATE: 22-JUN-19
PROJECT NO: 19-002A

S1.0

Established Basic Permit #
19-03671R2

Permit Number: 20-04896

END HOOKS, ALL GRADES OF STEEL				
BAR SIZE	D [A]	180° HOOKS		90° HOOKS
		A OR G	J	A OR G
#3	2¼"	5"	3"	6"
#4	3"	6"	4"	8"
#5	3¾"	7"	5"	10"
#6	4½"	8"	6"	1'–0"
#7	5¼"	10"	7"	1'–2"
#8	6"	11"	8"	1'–4"
#9	9½"	1'–3"	11¾"	1'–7"
#10	10¾"	1'–5"	1'–1¼"	1'–10"
#11	12"	1'–7"	1'–2¾"	2'–0"
#14	18¼"	2'–3"	1'–9¾"	2'–7"
#18	24"	3'–0"	2'–4½"	3'–5"

A) D = FINISHED INSIDE BEND DIAMETER

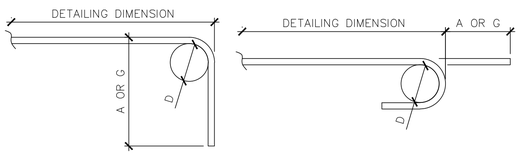

SEISMIC STIRRUP/TIE			
BAR SIZE	D [A]	135° SEISMIC HOOK	
		A OR G	H [B]
#3	1 ½"	4 ¼"	3"
#4	2"	4 ½"	3"
#5	2 ½"	5 ½"	3 ¾"
#6	4 ½"	8"	4 ½"
#7	5 ¼"	9"	5 ¼"
#8	6"	10 ½"	6"

A) D = FINISHED INSIDE BEND DIAMETER
B) H DIMENSION IS APPROXIMATE

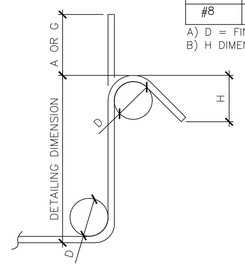

STIRRUP AND TIE HOOKS				
BAR SIZE	D [A]	135°		90°
		A OR G	H [B]	A OR G
#3	1½"	4"	2½"	4"
#4	2"	4½"	3"	4½"
#5	2½"	5½"	3¾"	6"
#6	4½"	8"	4½"	1'–0"
#7	5¼"	9"	5¼"	1'–2"
#8	6"	10½"	6"	1'–4"

A) D = FINISHED INSIDE BEND DIAMETER
B) H DIMENSION IS APPROXIMATE

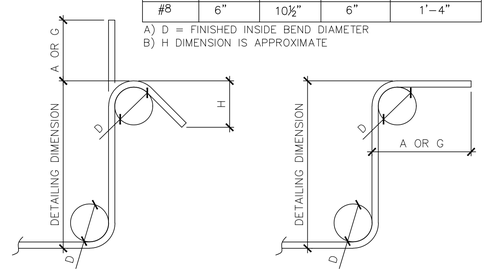

HOOK DEVELOPMENT LENGTH

BAR SIZE	f'c = 3,000 psi
#3	9
#4	11
#5	14
#6	17
#7	19
#8	22
#9	25
#10	28

NOTES:
1. ALL LENGTHS ARE IN INCHES.
2. VALUES ARE BASED ON GRADE 60 REINFORCING BARS & NORMAL–WEIGHT CONCRETE.

CHANGES MUST Be Approved Prior To Performing Work

BASIC PERMIT PACKAGE
REVIEWED FOR CODE COMPLIANCE
WITH IRC 2015
KITSAP COUNTY BUILDING DEPARTMENT

Subject To Field Inspection

revised

Reviewed for code compliance
with IRC 2015
Kitsap County Building Department
lasmith@co.kitsap.wa.us
11/16/2020

ABBREVIATIONS

AB	ANCHOR BOLT	EQ	EQUAL, EQUIVALENT	JT	JOINT	R	RADIUS
ACI	AMERICAN CONCRETE INST.	EQUIP	EQUIPMENT	L	ANGLE SECTION	REF	REFERENCE
ADD'L	ADDITIONAL	ES	EACH SIDE	LG	LONG	REINF	REINFORCING
ALT	ALTERNATE	EW	EACH WAY	LONGIT	LONGITUDINAL	REQ'D	REQUIRED
APPROX	APPROXIMATE	(E)	EXISTING	LL	LIVE LOAD	RW	RETAINING WALL
ARCH	ARCHITECTURAL	EXP	EXPANSION	LLH	LONG LEG HORIZONTAL	REV	REVISION
AT	ATTIC TRUSS	EXT	EXTERIOR	LLV	LONG LEG VERTICAL	SC	SLIP CRITICAL
BLDG	BUILDING	f'c	COMPRESSIVE STRENGTH OF CONCRETE, PSI	LT	LIGHT	SCHED	SCHEDULE
BLKG	BLOCKING			MAX	MAXIMUM	SHTG	SHEETING, SHEATHING
BM	BEAM	FDN	FOUNDATION	MB	MACHINE BOLT	SIM	SIMILAR
BRG	BEARING	FIN	FINISH	MC	MISC CHANNEL SECTION	SECT	SECTION
BOT	BOTTOM	FF	FAR FACE, FINISH FLOOR	MANF	MANUFACTURED	SOG	SLAB ON GRADE
C	CHANNEL SECTION	FLR	FLOOR	MECH	MECHANICAL	SPECS	SPECIFICATIONS
CGS	CENTROID OF TENDON	FLG	FLANGE	MEZZ	MEZZANINE	SQ	SQUARE
CJ	CONTROL JOINT	FOC	FACE OF CONCRETE	MIN	MINIMUM	SS	STAINLESS STEEL
℄	CENTERLINE	FOM	FACE OF MASONRY	MISC	MISCELLANEOUS	STAG	STAGGER(ED)
CLR	CLEAR	FOS	FACE OF STEEL, STUD	NF	NEAR FACE	STD	STANDARD
CMU	CONCRETE MASONRY UNIT	FS	FAR SIDE	NIC	NOT IN CONTRACT	STIFF	STIFFENER
COL	COLUMN	FTG	FOOTING	NO or #	NUMBER	STL	STEEL
CONC	CONCRETE	GA	GAUGE	NS	NEAR SIDE	STRUCT	STRUCTURAL
CONN	CONNECTION	GALV	GALVANIZED	NOM	NOMINAL	SW	SHEARWALL
CONST	CONSTRUCTION	GAT	GIRDER ATTIC TRUSS	NTS	NOT TO SCALE	SYMM	SYMMETRICAL
CONT	CONTINUOUS, CONTINUITY	GRD	GRADE	OC	ON CENTER	T	MANUFACTURED WOOD TRUSS
CONT'D	CONTINUED	GT	GIRDER TRUSS	OD	OUTSIDE DIAMETER	(T)	TOP
CSK	COUNTERSINK	HD	HOLDOWN	OPNG	OPENING	T & B	TOP & BOTTOM
DBL	DOUBLE	HDG	HOT DIPPED GALVANIZED	OPP	OPPOSITE	THRD	THREAD
DET	DETAIL	HDR	HEADER	PARA	PARALLEL	TOC	TOP OF CONCRETE
ø	DIAMETER	HGR	HANGER	PCF	POUNDS PER CUBIC FOOT	TOS	TOP OF STEEL
DIM	DIMENSION	HORIZ	HORIZONTAL	PEN	PANEL EDGE NAILING	TYP	TYPICAL
DL	DEAD LOAD	HS	HIGH STRENGTH	PERP	PERPENDICULAR	UNO	UNLESS NOTED OTHERWISE
DO	DITTO	HSS	HOLLOW STRUCTURE STEEL	PL	PLATE	VERT	VERTICAL
DT	DRAG TRUSS	HT	HEIGHT OR HIP TRUSS	PROJ	PROJECTION	W	WIDE FLANGE SECTION
DWL	DOWEL	IBC	INTERNATIONAL BUILDING CODE	PSF	POUNDS PER SQUARE FOOT	W/	WITH
EA	EACH	INFO	INFORMATION	PSI	POUNDS PER SQUARE INCH	W/O	WITHOUT
EF	EACH FACE	INFO	INFORMATION	PT	PRESERVATIVE TREATED	WWF	WELDED WIRE FABRIC
ELEV	ELEVATION	INT	INTERIOR				

FASTENER SCHEDULE

CONNECTION	FASTENING	LOCATION
JOIST TO SILL OR GIRDER	(3) 8D	TOE NAIL
BRIDGING TO JOIST	(2) 8D	TOE NAIL EACH END
SOLE PLATE TO JOIST OR BLKG	16D AT 16" OC	TYPICAL FACE NAIL
SOLE PLATE TO JOIST OR BLKG	(3) 16D AT 16" OC	SHEARWALL – FACE NAIL
TOP PLATE TO STUD	(2) 16D	END NAIL
STUD TO SOLE PLATE	(2) 16D	END NAIL
STUD TO 3x SOLE PLATE	(2) 20D	END NAIL
BUILT–UP CORNER STUDS	16D AT 12" OC	
MULTIPLE STUDS	16D AT 12" OC	FACE NAIL
DBL TOP PLATE	16D AT 16" OC	FACE NAIL
DBL TOP PLATE – LAP SPLICE	(8) 16D	FACE NAIL (EACH SIDE)
BLKG JOISTS OR RAFTERS TO TOP PLATE	(3) 8D	
RIM JOIST TO TOP PLATE	8D AT 6" OC	TOE NAIL
CONTINUOUS HEADER, TWO PIECES	16D AT 16" OC	ALONG EDGE
CEILING JOISTS TO PLATE	(3) 8D	TOE NAIL
CONTINUOUS HEADER TO STUD	(4) 8D	TOE NAIL
CEILING JOISTS, LAPS OVER PARTITIONS	(3) 16D	FACE NAIL
CEILING JOISTS .TO PARA RAFTERS	(3) 16D	FACE NAIL
RAFTER TO PLATE	(3) 8D COMMON	TOE NAIL
BUILT–UP GIRDER, FLR JOISTS, AND BEAMS	(2) 16D AT 12" OC CLINCHED	FACE NAIL AT TOP & BOT STAGGERED ON OPPOSITE SIDES EQUAL 6" OC
COLLAR TIE TO RAFTER	(3) 10D	FACE NAIL
JACK RAFTER TO HIP	(3) 10D	TOE NAIL
JACK RAFTER TO HIP	(2) 16D	FACE NAIL
ROOF RAFTER TO 2x RIDGE BM	(2) 16D	TOE NAIL
JOIST TO RIM JOIST	(3) 16D	FACE NAIL
LEDGER STRIP	(3) 16D	FACE NAIL

POST SCHEDULE

MARK	SIZE	SPECIES & GRADE	COMMENTS
1	6x6	DF–L NO. 1	
2	(2) 2x4	DF–L NO. 1	
3	(2) 2x6	DF–L NO. 1	
4	4x4	DF–L NO. 1	
5	4x6	DF–L NO. 1	
6	PT 4x4	HF NO. 1	

△# BEARING WALL SCHEDULE

MARK	SIZE	SPECIES & GRADE
1	2x6 @ 16" OC	DF–L NO. 2
2	2x4 @ 16" OC	DF–L NO. 2
3	2x4 @ 8" OC	DF–L NO. 2

⬡F# FOOTING SCHEDULE

MARK	SIZE	REINFORCING
F1.6	1'–6" SQx0'–10"	#4 @ 8" OC EW
F2	2'–0" SQx0'–10"	#4 @ 8" OC EW
F3.2	3'–2" SQx0'–10"	#4 @ 8" OC EW

PACIFIC NORTHWEST STRUCTURAL GROUP, INC
A PROFESSIONAL ENGINEERING COMPANY
6193 NE MALBON CT.
KINGSTON, WA 98346
360.903.2803

RED BARN LANE - DUPLEX I880/I620A
NW HOGAN LN & NELS NELSON RD NW
BREMERTON, WA 98311
STRUCTURAL SCHEDULES

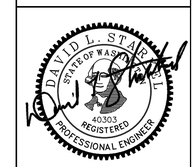

REVISIONS

DATE: 22-JUN-19
PROJECT NO: 19-002A

S1.1
2 OF 12 SHEETS

Established Basic Permit #
19-03671R2

Permit Number: 20-04896

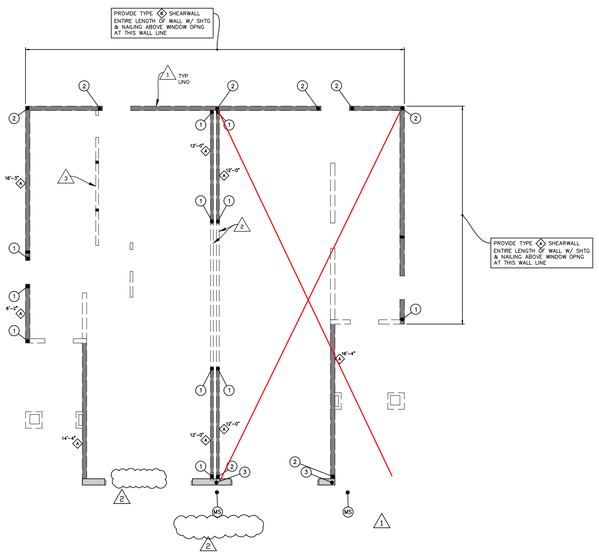

A S2.0 FIRST FLOOR SHEARWALL PLAN

SCALE: 1/8"=1'-0"

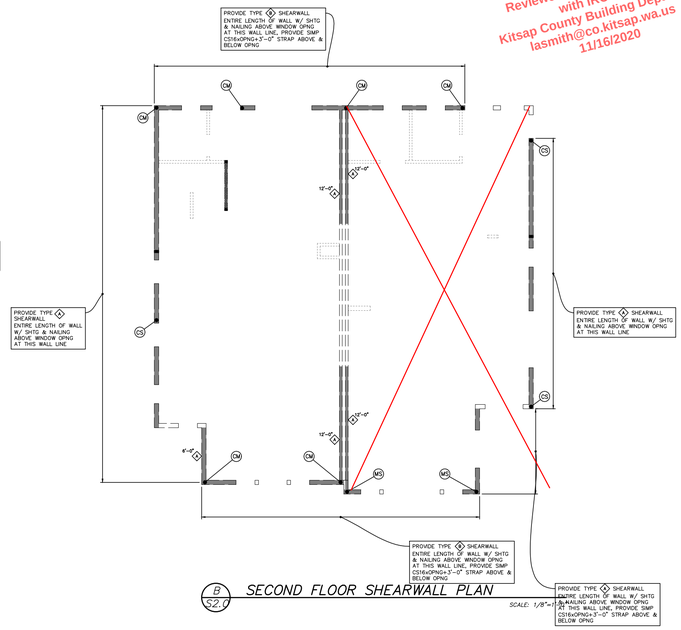

B S2.0 SECOND FLOOR SHEARWALL PLAN

SCALE: 1/8"=1'-0"

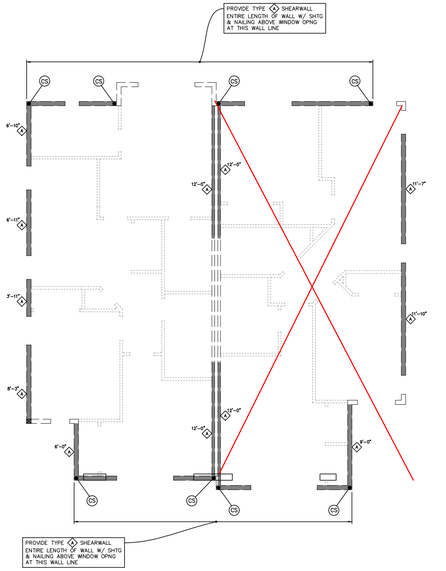

C S2.0 THIRD FLOOR SHEARWALL PLAN

SCALE: 1/4"=1'-0"

Reviewed for code compliance
with IRC 2015
Kitsap County Building Department
lasmith@co.kitsap.wa.us
11/16/2020

Subject To Field Inspection

revised

HOLDOWN & TENSION STRAP SCHEDULE

MARK	HOLDOWN OR[1] TENSION STRAP	ANCHOR ROD[2]	POST[3]	FOOTING		CAPACITY (LBS)
				SIZE	REINF'G	
1	HDU2-SDS2.5	5/8"øx1'-6" EMBED	(2) 2x	N/A	N/A	3,075
2	HDU5-SDS2.5	5/8"øx1'-3" EMBED	(2) 2x	2'-0" SQx1'-0"	#4x1-8 @ 12" OC	5,645
CS	CSx14-4'-0"	N/A	2x	N/A	N/A	2,490
CM	CMST14x6'-0"	N/A	(2) 2x	N/A	N/A	6,490
MS	MSTC48B3	N/A	(2) 2x	N/A	N/A	3,975

NOTES:

1. PROVIDE SIMPSON STRONG-TIE OR EQUIVALENT. FOR EQUIVALENT HOLDOWN OR STRAP, SUBMIT TO ENGINEER OF RECORD FOR APPROVAL. INSTALL PER MANUFACTURER SPECIFICATIONS.
2. PROVIDE ASTM A36 OR A307 THREADED ROD W/ PL ¼"x3" SQ W/ DBL NUTS @ END.
3. USE MINIMUM TWO STUDS AT END OF SHEARWALL. PROVIDE EDGE NAILING FOR FULL HEIGHT OF MULTIPLE STUDS OR POST AT TIE DOWN ANCHOR, DOOR AND WINDOW JAMBS.
4. PLACE HD NO CLOSER THAN 6" TO FND VENT OR OTHER CONC STEM WALL OPNG'S.

X SHEARWALL SCHEDULE

MARK	WALL SHEATHING	FASTENING[2]		FOUNDATION SILL PLATE		SOLE PLATE FASTENERS	TOP PLATE FASTENERS
		PANEL EDGE[3]	INTERMEDIATE SUPPORT	SIZE	FASTENER		
A	15/32" SHTG	8d @ 6" OC	8d @ 12" OC	2x	5/8"ø @ 60" OC	16d @ 8" OC	SIMP LS50 @ 24" OC
B	15/32" SHTG	8d @ 4" OC	8d @ 12" OC	3x	5/8"ø @ 40" OC	(2) 16d @ 12" OC	SIMP LS50 @ 16" OC
C	15/32" SHTG	8d @ 3" OC	8d @ 12" OC	3x	5/8"ø @ 32" OC	(3) 16d @ 12" OC	SIMP LS70 @ 16" OC

NOTES:

1. BLOCK ALL PANEL EDGES. SEE STRUCTURAL NOTES FOR SHTG REQUIREMENTS. SEE DETAIL 6/S3.3 FOR TYPICAL CONSTRUCTION.
2. NAILS SHALL BE COMMON TYPE.
3. PROVIDE EDGE NAILING AT ALL END STUDS, SILL PLATES, RIM BOARDS, AND TOP PLATES.
4. STAGGER EDGE NAILING FOR FULL HEIGHT OF STUDS AT HOLD DOWN ANCHORS, DOOR JAMBS, AND WINDOW JAMBS.
5. USE 3x STUDS OR DBL 2x STUDS FASTENED TOGETHER W/ (2) 10d NAILS @ 12" OC @ LOCATIONS RECEIVING EDGE NAILING FROM ABUTTING PANELS FOR SHEARWALL TYPE(S) B & C AT ALL FRMG LEVELS.
6. SILL PLATES AGAINST CONCRETE SHALL BE PRESERVATIVE-TREATED. SEE DETAIL 2/S3.3 FOR TYPICAL ANCHOR BOLT LAYOUT AND SILL PLATE NOTCHING REQUIREMENTS.
7. PROVIDE ASTM A307 ANCHOR BOLTS WITH 7" MIN EMBEDMENT FOR FOUNDATION SILL PLATES AGAINST CONC. APPROVED MECHANICAL ANCHORS MAY BE USED IN-LIEU-OF ANCHOR BOLTS. SEE STRUCTURAL NOTES FOR APPROVED MECHANICAL ANCHORS. PROVIDE PL¼"x3" SQ GALVANIZED WASHERS AT EACH ANCHOR BOLT OR MECHANICAL ANCHOR.
8. PLACE WALL SHEATHING ON SAME SIDE OF WALL AS WHERE SHEARWALL MARK IS LOCATED OR ARROW POINTS.
9. PROVIDE DOUG-FIR LARCH MEMBERS FOR ALL SHEARWALLS.
10. PROVIDE MINIMUM TWO (2) STUDS AT END OF SHEARWALL UNO. SEE HOLDOWN SCHEDULE FOR ADD'L POST SIZE INFORMATION.

1

CHANGES
MUST Be Approved Prior
To Performing Work

BASIC PERMIT PACKAGE
REVIEWED FOR CODE COMPLIANCE
WITH IRC 2015
KITSAP COUNTY BUILDING DEPARTMENT

PACIFIC NORTHWEST
STRUCTURAL GROUP, INC
A PROFESSIONAL ENGINEERING COMPANY
6193 NE MALBON CT.
KINGSTON, WA 98346
360.903.2803

RED BARN LANE - DUPLEX 1880/1620A
NW HOGAN LN & NELS NELSON RD NW
BREMERTON, WA 98311
SHEARWALL & HOLDOWN PLANS & SCHEDULES

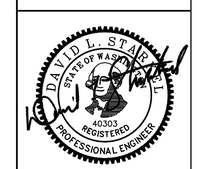

REVISIONS	
1	08-APR-20

DATE: 22-JUN-19
PROJECT NO: 19-002A

S2.0

Established Basic Permit #
19-03671R2

Permit Number: 20-04896

Reviewed for code compliance
with IRC 2015
Kitsap County Building Department
lasmith@co.kitsap.wa.us
11/16/2020

revised

BASIC PERMIT PACKAGE
REVIEWED FOR CODE COMPLIANCE
WITH IRC 2015
KITSAP COUNTY BUILDING DEPARTMENT

Subject To Field Inspection

**CHANGES
MUST Be Approved Prior
To Performing Work**

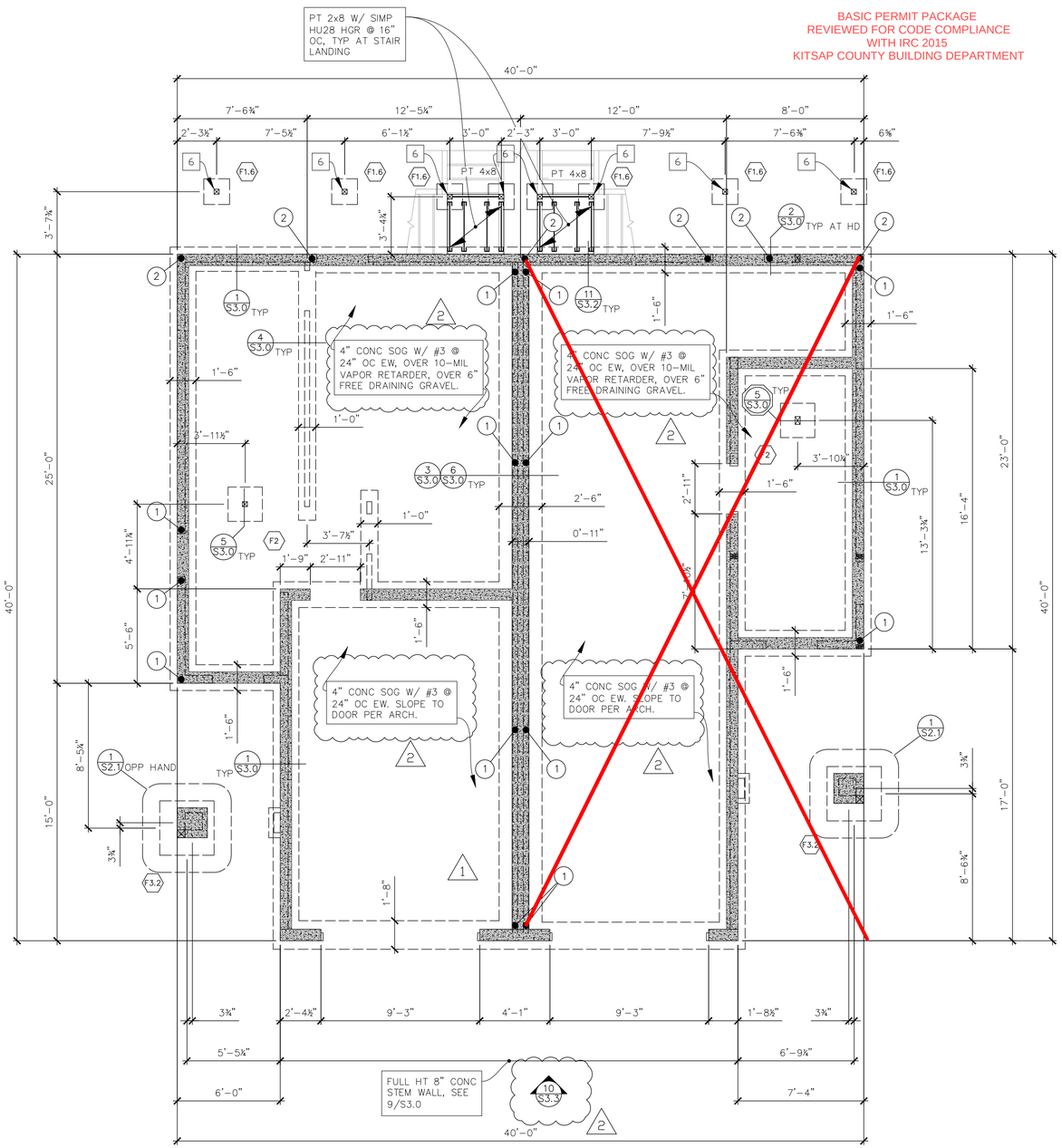

A S2.1 FOUNDATION/FIRST FLOOR FRAMING PLAN

SCALE: 1/4"=1'-0"

FOUNDATION NOTES:

1. SEE SHEET S1.0 FOR STRUCTURAL NOTES.
2. SEE SHEET S1.1 FOR STRUCTURAL SCHEDULES
3. SEE SHEET S2.2 FOR PLAN NOTES.
4. SEE SHEET S3.4 FOR TYPICAL DETAILS & SECTIONS.
5. COORDINATE ALL DIMENSIONS AND FEATURES NOT SHOWN WITH ARCHITECT, AS ALL DIMENSIONS SHOWN ARE DERIVED FROM ARCHITECTURAL PLANS. IT REMAINS THE RESPONSIBILITY OF THE CONTRACTOR TO VERIFY ALL DIMENSIONS.
6. BOTTOM OF EXTERIOR FOOTINGS TO BE A MINIMUM OF 1'-0" BELOW FINISH GRADE AND 1'-0" BELOW EXTERIOR FINISH GRADE, WHICH EVER IS GREATER.
7. STEP FOOTING AS SHOWN OR NEEDED TO PROVIDE TOP OF FOOTING 1'-0" MINIMUM BELOW GRADE.
8. ALL FOOTINGS MUST TO BEAR ON UNDISTURBED NATIVE SOILS OR ON APPROVED STRUCTURAL FILL THAT BEARS ON IN-PLACE NATIVE SOIL. CENTER FOOTINGS UNDER COLUMNS UNO.
9. INDICATES 8" CONC STEM WALL. PROVIDE #4xCONT HORIZ T&B, & #4xCONT HORIZ @ 18" OC WHERE STEM HT EXCEEDS 3'-0". SEE DETAILS SHEET S3.0 FOR ADD'L INFO.
10. F# INDICATES FOOTING TYPE & LOCATION. SEE FOOTING SCHEDULE FOR ADD'L INFORMATION.
11. # INDICATES HOLDOWN TYPE & LOCATION. SEE HOLDOWN SCHEDULE FOR ADD'L INFORMATION. NOTE HOLDOWNS WHICH ORIGINATE ON FOUNDATION ARE ALSO SHOWN ON SHEET S2.2.
12. PLACE MAX 3'-0" DIFFERENTIAL BACKFILL AGAINST CONC STEM WALL.

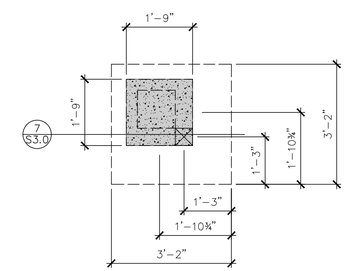

1 S2.1 PLAN DETAIL

SCALE: 1" = 1'-0"

NOTE:
SEE A/S2.1 FOR ADD'L INFO.

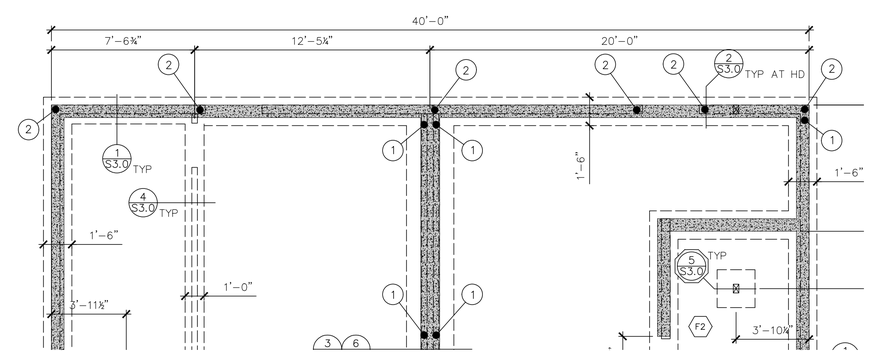

B S2.1 ALTERNATE FOUNDATION PLAN

SCALE: 1/4"=1'-0"

PACIFIC NORTHWEST
STRUCTURAL GROUP, INC
A PROFESSIONAL ENGINEERING COMPANY
6199 NE MALBON CT.
KINGSTON, WA 98346
360.903.2803

RED BARN LANE - DUPLEX 1880/1620A
NW HOGAN LN & NELS NELSON RD NW
BREMERTON, WA 98311
FOUNDATION/FIRST FLOOR FRAMING PLAN

DAVID L. STARR
STATE OF WASHINGTON
40303
REGISTERED
PROFESSIONAL ENGINEER

REVISIONS	
1	05-DEC-19
2	29-MAY-20

DATE: 22-JUN-19
PROJECT NO: 19-002A

S2.1

4 OF 12 SHEETS

Established Basic Permit #
19-03671R2

Permit Number: 20-04896

revised

BASIC PERMIT PACKAGE
REVIEWED FOR CODE COMPLIANCE
WITH IRC 2015
KITSAP COUNTY BUILDING DEPARTMENT

Subject To Field Inspection

CHANGES
MUST Be Approved Prior
To Performing Work

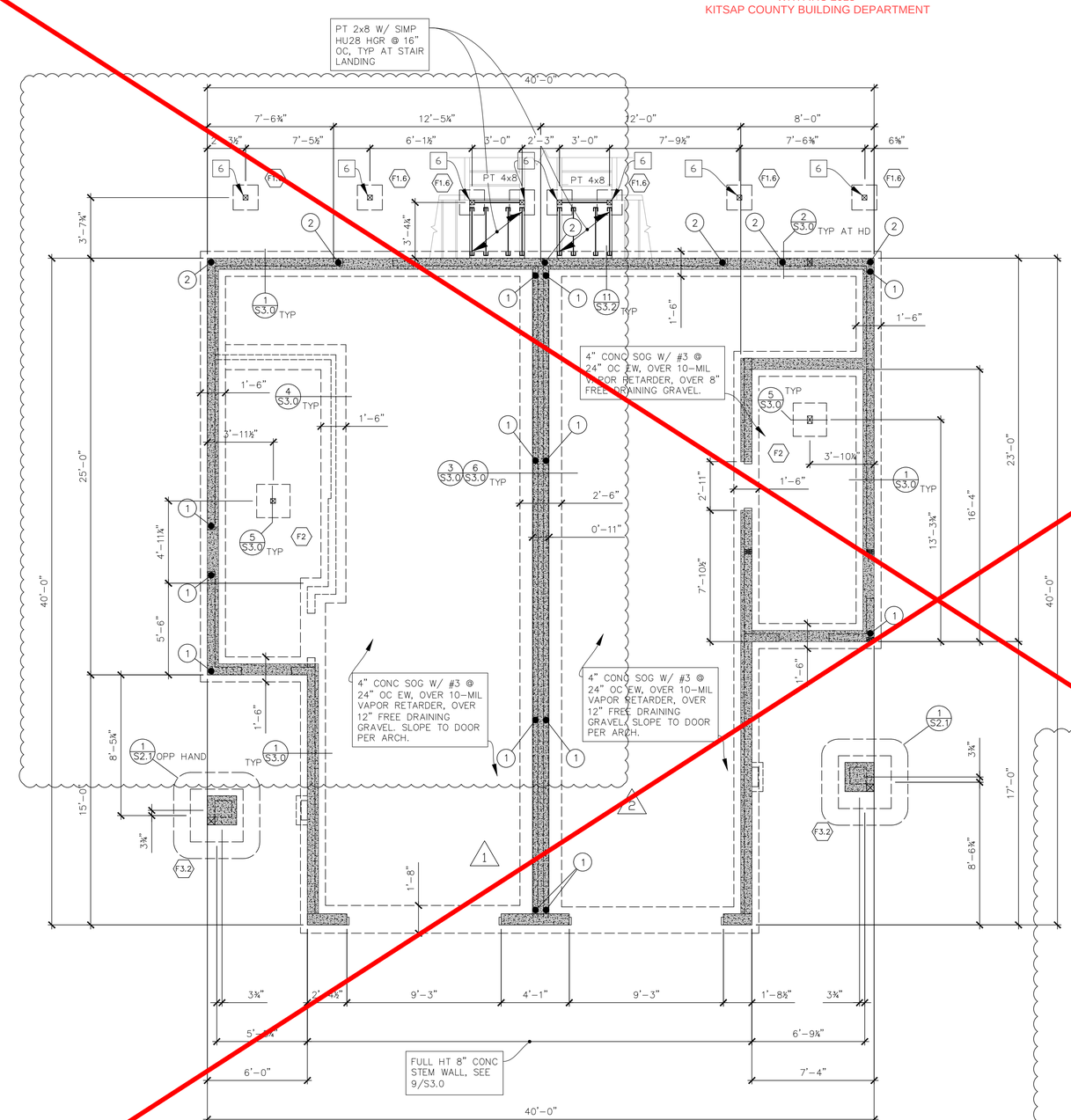

A S2.1 FOUNDATION/FIRST FLOOR FRAMING PLAN

SCALE: 1/4"=1'-0"

FOUNDATION NOTES:

1. SEE SHEET S1.0 FOR STRUCTURAL NOTES.
2. SEE SHEET S1.1 FOR STRUCTURAL SCHEDULES
3. SEE SHEET S2.2 FOR PLAN NOTES.
4. SEE SHEET S3.4 FOR TYPICAL DETAILS & SECTIONS.
5. COORDINATE ALL DIMENSIONS AND FEATURES NOT SHOWN WITH ARCHITECT, AS ALL DIMENSIONS SHOWN ARE DERIVED FROM ARCHITECTURAL PLANS. IT REMAINS THE RESPONSIBILITY OF THE CONTRACTOR TO VERIFY ALL DIMENSIONS.
6. BOTTOM OF EXTERIOR FOOTINGS TO BE A MINIMUM OF 1'-0" BELOW FINISH GRADE AND 1'-0" BELOW EXTERIOR FINISH GRADE, WHICH EVER IS GREATER.
7. STEP FOOTING AS SHOWN OR NEEDED TO PROVIDE TOP OF FOOTING 1'-0" MINIMUM BELOW GRADE.
8. ALL FOOTINGS MUST TO BEAR ON UNDISTURBED NATIVE SOILS OR ON APPROVED STRUCTURAL FILL THAT BEARS ON IN-PLACE NATIVE SOIL. CENTER FOOTINGS UNDER COLUMNS UNO.
9. INDICATES 8" CONC STEM WALL. PROVIDE #4xCONT HORIZ T&B, & #4xCONT HORIZ @ 18" OC WHERE STEM HT EXCEEDS 3'-0". SEE DETAILS SHEET S3.0 FOR ADD'L INFO.
10. (F#) INDICATES FOOTING TYPE & LOCATION. SEE FOOTING SCHEDULE FOR ADD'L INFORMATION.
11. (#) INDICATES HOLDOWN TYPE & LOCATION. SEE HOLDOWN SCHEDULE FOR ADD'L INFORMATION. NOTE HOLDOWNS WHICH ORIGINATE ON FOUNDATION ARE ALSO SHOWN ON SHEET S2.2.
12. PLACE MAX 3'-0" DIFFERENTIAL BACKFILL AGAINST CONC STEM WALL.

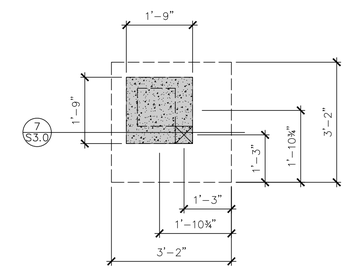

1 S2.1 PLAN DETAIL

SCALE: 1" = 1'-0"

NOTE:
SEE A/S2.1 FOR ADD'L INFO.

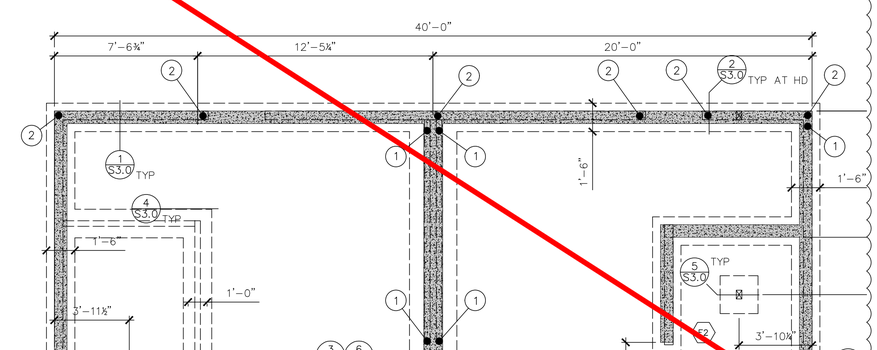

B S2.1 ALTERNATE FOUNDATION PLAN

SCALE: 1/4"=1'-0"

PACIFIC NORTHWEST STRUCTURAL GROUP, INC
A PROFESSIONAL ENGINEERING COMPANY
6199 NE MALBON CT.
KINGSTON, WA 98346
360.903.2803

RED BARN LANE - DUPLEX 1880/1620A
NW HOGAN LN & NELS NELSON RD NW
BREMERTON, WA 98311
ALT - FOUNDATION/FIRST FLOOR FRAMING PLAN

DAVID L. STARKEY, STATE OF WASHINGTON, 40303, REGISTERED PROFESSIONAL ENGINEER

REVISIONS	
1	05-DEC-19
2	08-APR-20

DATE: 22-JUN-19
PROJECT NO: 19-002A

S2.1A

Established Basic Permit #
19-03671R2

Permit Number: 20-04896

revised

Reviewed for code compliance
with IRC 2015
Kitsap County Building Department
lasmith@co.kitsap.wa.us
11/16/2020

BASIC PERMIT PACKAGE
REVIEWED FOR CODE COMPLIANCE
WITH IRC 2015
KITSAP COUNTY BUILDING DEPARTMENT

Subject To Field Inspection

CHANGES MUST Be Approved Prior To Performing Work

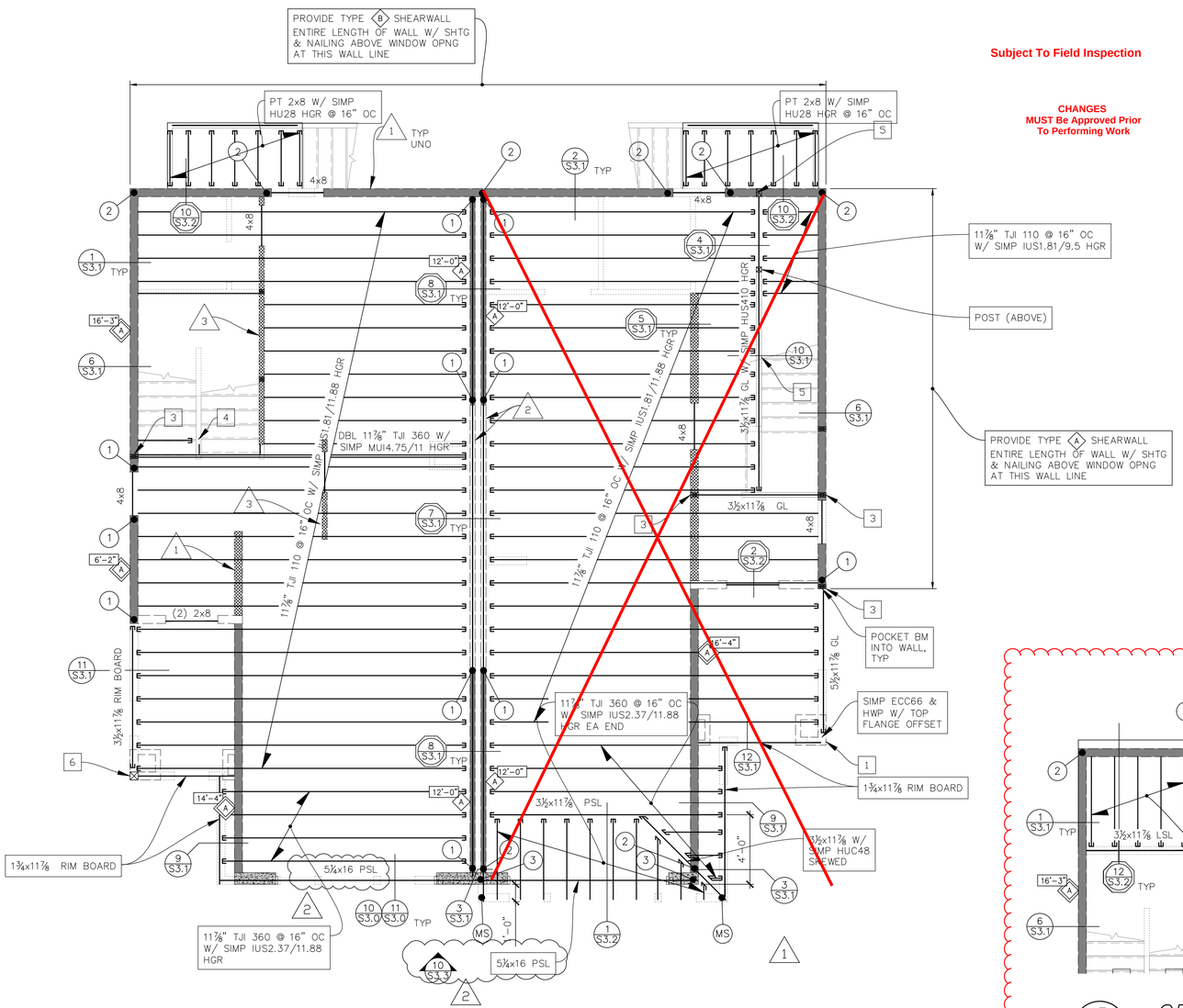

A S2.2 SECOND FLOOR FRAMING PLAN

SCALE: 1/4"=1'-0"

PLAN NOTES:

1. SEE SHEET S1.0 FOR STRUCTURAL NOTES.
2. SEE SHEET S1.1 FOR STRUCTURAL SCHEDULES.
3. SEE SHEET S3.4 FOR TYPICAL DETAILS & SECTIONS.
4. SHEARWALLS AND HOLDOWNS SHOWN ON THIS PLAN ARE FOR THE WALLS SUPPORTING THE FRAMING.
5. COORDINATE ALL DIMENSIONS AND FEATURES NOT SHOWN WITH ARCHITECT. ALL DIMENSIONS SHOWN ARE DERIVED FROM ARCHITECTURAL PLANS. IT REMAINS THE RESPONSIBILITY OF THE CONTRACTOR TO VERIFY ALL DIMENSIONS.

4. #'-#" X — INDICATES SHEARWALL TYPE, LOCATION, & MINIMUM SHEARWALL LENGTH. SEE ARCHITECTURAL PLANS FOR WALL LENGTH. SEE SHEARWALL SCHEDULE FOR ADD'L INFORMATION.

5. # — INDICATES HOLDOWN TYPE & LOCATION. HOLDOWN OCCURS AT BOTTOM OF WALL SHOWN UNO. SEE HOLDOWN SCHEDULE FOR ADD'L INFORMATION.

6. INDICATES INTERIOR BEARING WALL. PROVIDE 2x STUDS @ 16" OC W/ DBL TOP PLATE.

6. # — INDICATES POST MARK, SEE POST SCHEDULE ON SHEET S1.1. PROVIDE POST TO ALIGN FOR EACH LEVEL BELOW TO FOUNDATION, EXCEPT WHERE POSTS ARE SUPPORTED BY A BEAM. PROVIDE SOLID BLKG BETWEEN TOP PLATE & SOLE PLATE AT ALL POST LOCATIONS.

7. # — INDICATES BEARING WALL MARK, SEE BEARING WALL SCHEDULE ON SHEET S1.1. AT BEARING WALLS, STUDS BELOW ARE TO BE WITHIN 4½" ℄ ROOF TRUSS OR FLR JOIST TO ℄ OF CLOSEST ADJACENT STUD, ADD EXTRA STUDS TO MEET THIS REQUIREMENT.

8. PROVIDE DOUBLE 2x TOP PLATES AT ALL BEARING & SHEARWALLS. LAP DOUBLE TOP PLATES SPLICES 4'-0" WITH TWO ROWS OF 10d NAILS AT 4" OC STAGGERED.
9. USE TWO 2x TRIMMERS AND ONE 2x KING STUD, TYP AT INTERIOR HEADERS. USE ONE 2x TRIMMER AND ONE 2x KING STUD, TYP AT EXT. HEADERS, UNO.
10. PROVIDE CORROSION RESISTANT PC TYPE POST CAP AT POST TO BM CONNECTIONS @ EXTERIOR DECKS TYP UNO.

NOTE:
SEE A/S2.2 FOR ADD'L INFO.

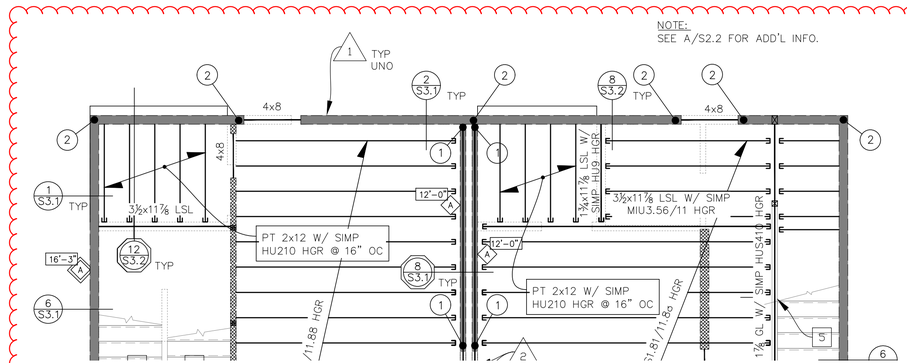

B S2.2 OPTIONAL DECK FRAMING PLAN

SCALE: 1/4"=1'-0"

PACIFIC NORTHWEST STRUCTURAL GROUP, INC
A PROFESSIONAL ENGINEERING COMPANY
6199 NE MALBON CT.
KINGSTON, WA 98346
360.903.2803

RED BARN LANE - DUPLEX 1880/1620A
NW HOGAN LN & NELS NELSON RD NW
BREMERTON, WA 98311
SECOND FLOOR FRAMING PLAN

DAVID L. STARR
STATE OF WASHINGTON
40303
REGISTERED PROFESSIONAL ENGINEER

REVISIONS	
1	05-DEC-19
2	05-DEC-19

DATE: 22-JUN-19
PROJECT NO: 19-002A

S2.2

Established Basic Permit #
19-03671R2

Permit Number: 20-04896

BASIC PERMIT PACKAGE
REVIEWED FOR CODE COMPLIANCE
WITH IRC 2015
KITSAP COUNTY BUILDING DEPARTMENT

Subject To Field Inspection

CHANGES
MUST Be Approved Prior
To Performing Work

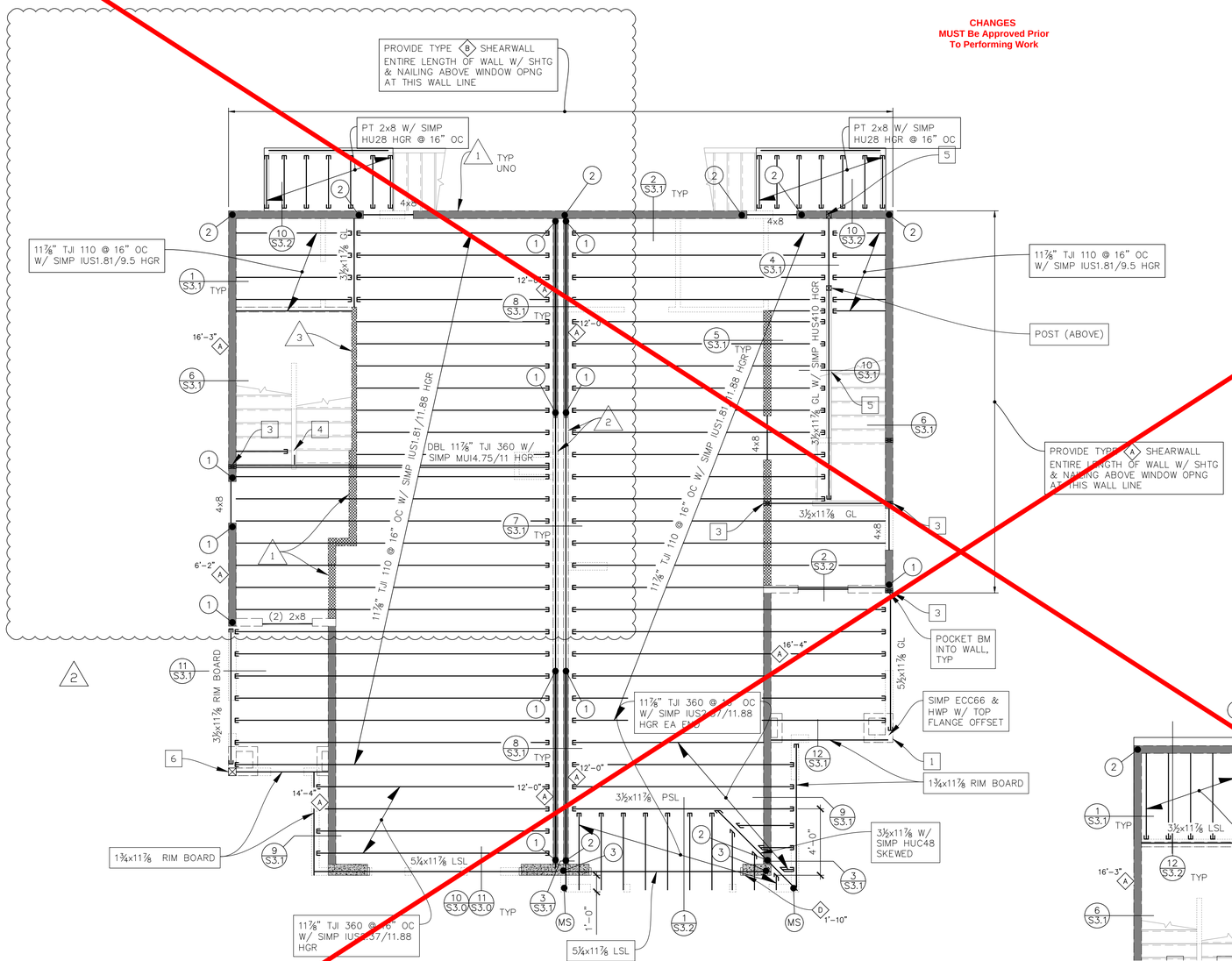

A S2.2 SECOND FLOOR FRAMING PLAN

SCALE: 1/4"=1'-0"

PLAN NOTES:

1. SEE SHEET S1.0 FOR STRUCTURAL NOTES.
2. SEE SHEET S1.1 FOR STRUCTURAL SCHEDULES.
3. SEE SHEET S3.4 FOR TYPICAL DETAILS & SECTIONS.
4. SHEARWALLS AND HOLDOWNS SHOWN ON THIS PLAN ARE FOR THE WALLS SUPPORTING THE FRAMING.
5. COORDINATE ALL DIMENSIONS AND FEATURES NOT SHOWN WITH ARCHITECT. ALL DIMENSIONS SHOWN ARE DERIVED FROM ARCHITECTURAL PLANS. IT REMAINS THE RESPONSIBILITY OF THE CONTRACTOR TO VERIFY ALL DIMENSIONS.

4. #'-#" — INDICATES SHEARWALL TYPE, LOCATION, & MINIMUM SHEARWALL LENGTH. SEE ARCHITECTURAL PLANS FOR WALL LENGTH. SEE SHEARWALL SCHEDULE FOR ADD'L INFORMATION.

5. INDICATES HOLDOWN TYPE & LOCATION. HOLDOWN OCCURS AT BOTTOM OF WALL SHOWN UNO. SEE HOLDOWN SCHEDULE FOR ADD'L INFORMATION.

6. INDICATES INTERIOR BEARING WALL. PROVIDE 2x STUDS @ 16" OC W/ DBL TOP PLATE.

6. INDICATES POST MARK, SEE POST SCHEDULE ON SHEET S1.1. PROVIDE POST TO ALIGN FOR EACH LEVEL BELOW TO FOUNDATION, EXCEPT WHERE POSTS ARE SUPPORTED BY A BEAM. PROVIDE SOLID BLKG BETWEEN TOP PLATE & SOLE PLATE AT ALL POST LOCATIONS.

7. INDICATES BEARING WALL MARK, SEE BEARING WALL SCHEDULE ON SHEET S1.1. AT BEARING WALLS, STUDS BELOW ARE TO BE WITHIN 4½" ℄ ROOF TRUSS OR FLR JOIST TO ℄ OF CLOSEST ADJACENT STUD, ADD EXTRA STUDS TO MEET THIS REQUIREMENT.

8. PROVIDE DOUBLE 2x TOP PLATES AT ALL BEARING & SHEARWALLS. LAP DOUBLE TOP PLATES SPLICES 4'-0" WITH TWO ROWS OF 10d NAILS AT 4" OC STAGGERED.
9. USE TWO 2x TRIMMERS AND ONE 2x KING STUD, TYP AT INTERIOR HEADERS. USE ONE 2x TRIMMER AND ONE 2x KING STUD, TYP AT EXT. HEADERS, UNO.
10. PROVIDE CORROSION RESISTANT PC TYPE POST CAP AT POST TO BM CONNECTIONS @ EXTERIOR DECKS TYP UNO.

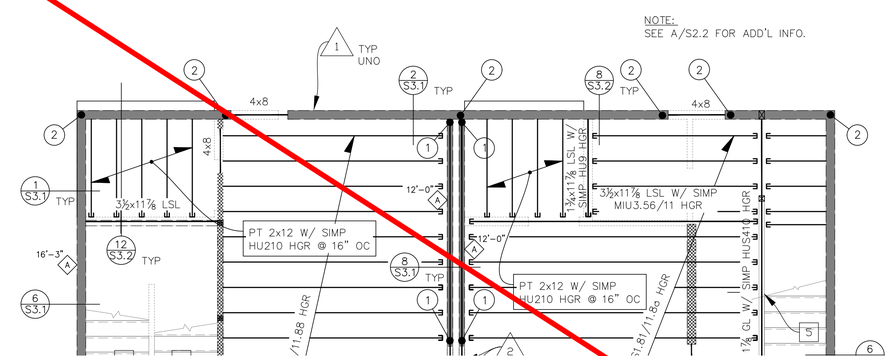

B S2.2 OPTIONAL DECK FRAMING PLAN

SCALE: 1/4"=1'-0"

PACIFIC NORTHWEST STRUCTURAL GROUP, INC
A PROFESSIONAL ENGINEERING COMPANY
6199 NE MALBON CT.
KINGSTON, WA 98346
360.903.2803

RED BARN LANE - DUPLEX 1880/1620A
NW HOGAN LN & NELS NELSON RD NW
BREMERTON, WA 98311
ALT - SECOND FLOOR FRAMING PLAN

DAVID L. STARKEY, STATE OF WASHINGTON, 40303, REGISTERED PROFESSIONAL ENGINEER

REVISIONS	
1	05-DEC-19
2	08-APR-20

DATE: 22-JUN-19
PROJECT NO: 19-002A

S2.2A

Established Basic Permit #
19-03671R2

Permit Number: 20-04896

revised

BASIC PERMIT PACKAGE
REVIEWED FOR CODE COMPLIANCE
WITH IRC 2015
KITSAP COUNTY BUILDING DEPARTMENT

Reviewed for code compliance
with IRC 2015
Kitsap County Building Department
lasmith@co.kitsap.wa.us
11/16/2020

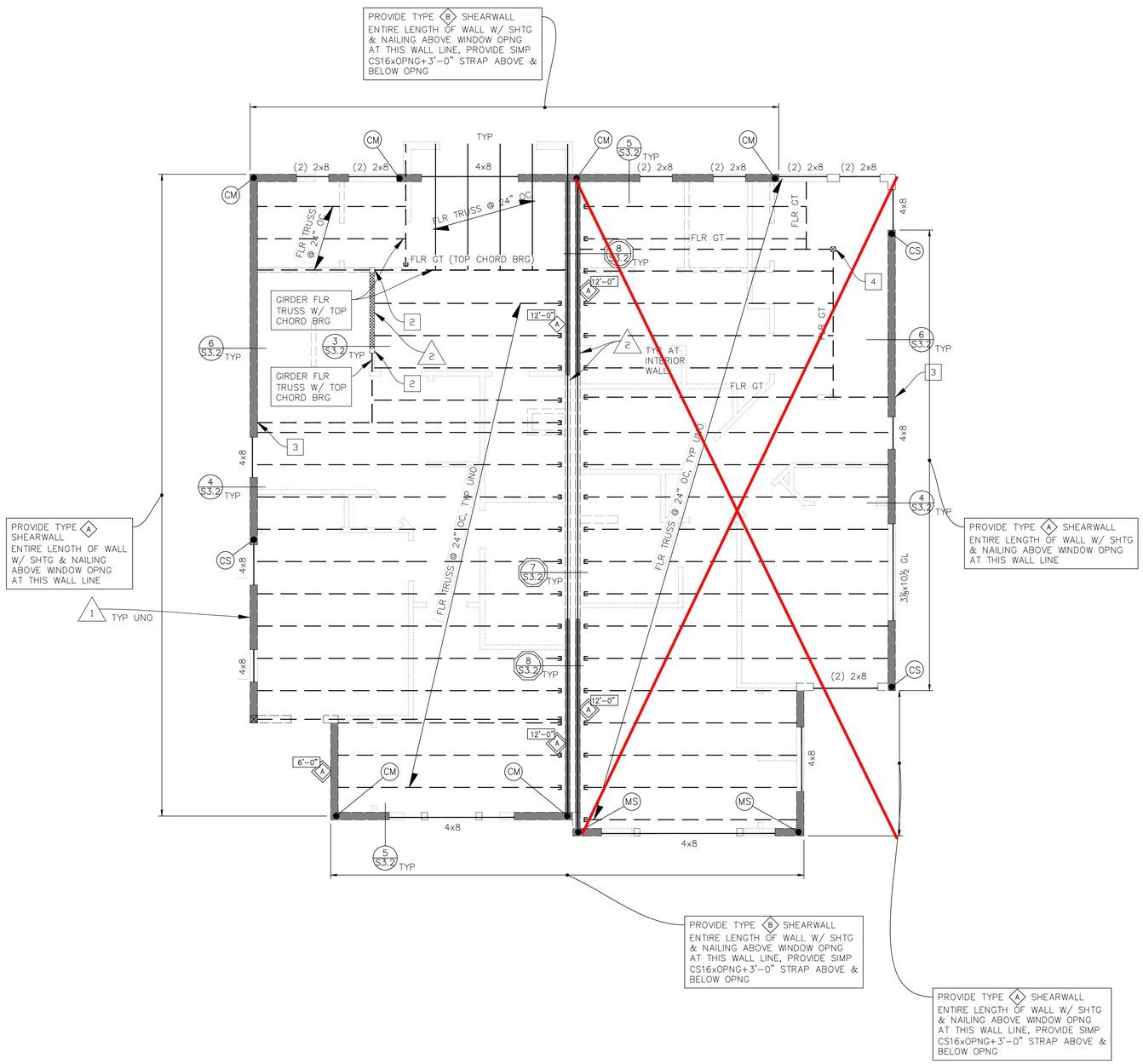

A / S2.3 THIRD FLOOR FRAMING PLAN

SCALE: 1/4"=1'-0"

PLAN NOTES:

1. SEE SHEET S1.0 FOR STRUCTURAL NOTES.
2. SEE SHEET S1.1 FOR STRUCTURAL SCHEDULES
3. SEE SHEET S2.2 FOR PLAN NOTES.

Subject To Field Inspection

CHANGES MUST Be Approved Prior To Performing Work

PACIFIC NORTHWEST STRUCTURAL GROUP, INC
A PROFESSIONAL ENGINEERING COMPANY
6199 NE MALBON CT.
KINGSTON, WA 98346
360.903.2803

RED BARN LANE - DUPLEX 1880/1620A
NW HOGAN LN & NELS NELSON RD NW
BREMERTON, WA 98311
THIRD FLOOR FRAMING PLAN

STATE OF WASHINGTON DAVID L. STARR 40303 REGISTERED PROFESSIONAL ENGINEER

REVISIONS

DATE: 22-JUN-19
PROJECT NO: 19-002A

S2.3

Established Basic Permit #
19-03671R2

Permit Number: 20-04896

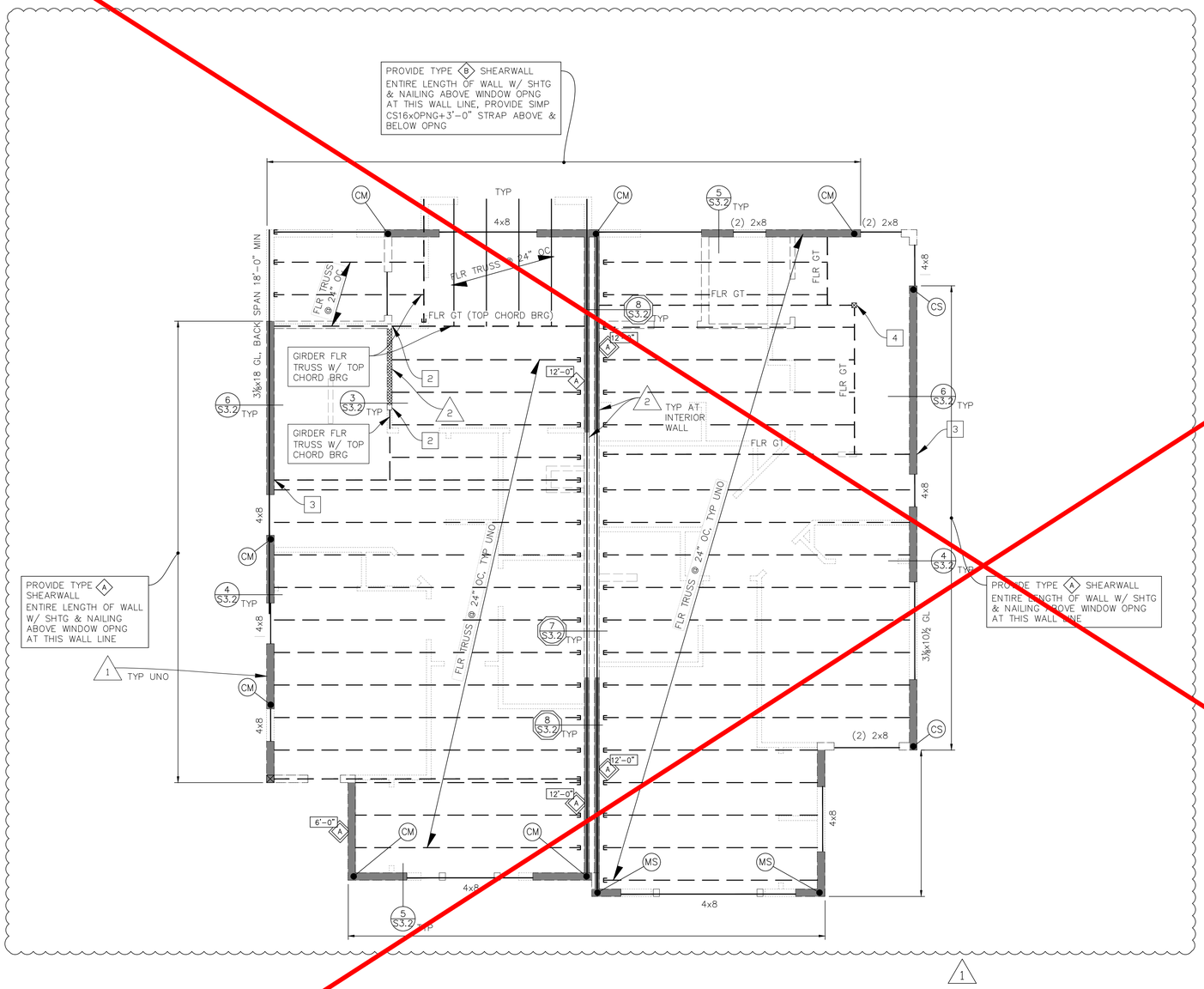

A S2.3A ALTERNATE THIRD FLOOR FRAMING PLAN

SCALE: 1/4"=1'-0"

revised

PLAN NOTES:

1. SEE SHEET S1.0 FOR STRUCTURAL NOTES.
2. SEE SHEET S1.1 FOR STRUCTURAL SCHEDULES
3. SEE SHEET S2.2 FOR PLAN NOTES.

Subject To Field Inspection

BASIC PERMIT PACKAGE
REVIEWED FOR CODE COMPLIANCE
WITH IRC 2015
KITSAP COUNTY BUILDING DEPARTMENT

CHANGES MUST Be Approved Prior To Performing Work

PACIFIC NORTHWEST STRUCTURAL GROUP, INC
A PROFESSIONAL ENGINEERING COMPANY
6199 NE MALBON CT.
KINGSTON, WA 98346
360.903.2803

RED BARN LANE - DUPLEX 1880/1620A
NW HOGAN LN & NELS NELSON RD NW
BREMERTON, WA 98311
THIRD FLOOR FRAMING PLAN

DAVID L. STAHL
STATE OF WASHINGTON
40303
REGISTERED
PROFESSIONAL ENGINEER

REVISIONS	
1	05-DEC-19

DATE: 22-JUN-19
PROJECT NO: 19-002A

S2.3A

6 OF 12 SHEETS

Established Basic Permit #
19-03671R2

Permit Number: 20-04896

Reviewed for code compliance
with IRC 2015
Kitsap County Building Department
lasmith@co.kitsap.wa.us
11/16/2020

revised

BASIC PERMIT PACKAGE
REVIEWED FOR CODE COMPLIANCE
WITH IRC 2015
KITSAP COUNTY BUILDING DEPARTMENT

Subject To Field Inspection

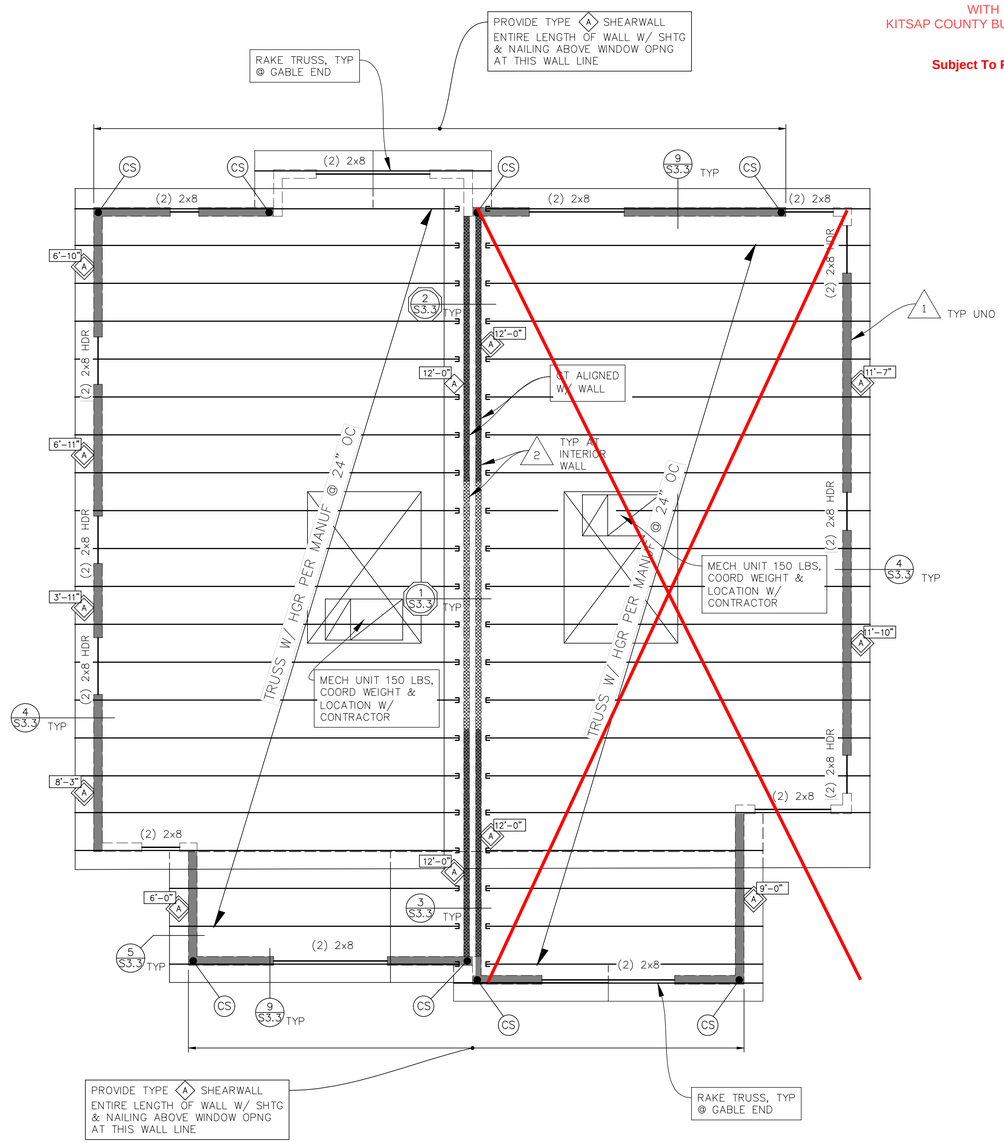

ROOF NOTES:

1. SEE SHEET S1.0 FOR STRUCTURAL NOTES.
2. SEE SHEET S1.1 FOR STRUCTURAL SCHEDULES.
2. SEE SHEET S3.4 FOR TYPICAL DETAILS & SECTIONS.
3. SEE SHHET S2.2 FOR PLAN NOTES.
4. SHEARWALLS AND HOLDOWNS SHOWN ON THIS PLAN ARE FOR THE WALLS SUPPORTING THE FRAMING.
5. COORDINATE ALL DIMENSIONS & FEATURES NOT SHOWN W/ ARCHITECT.
6. " T " INDICATES LIGHT METAL PLATE TRUSS DESIGNED BY OTHERS. ALL LIGHT-METAL PLATE WOOD TRUSSES SHALL BE SPACED @ 24" OC UNO. DESIGN TRUSSES FOR ROOF SNOW LOAD OF 25 PSF & ROOF DEAD LOAD OF 15 PSF IN ADDITION TO MECHANICAL WEIGHTS. DESIGN TRUSSES FOR ADD'L LOADS AS SHOWN ON ARHCITECTURAL SHEET(S), USE MULTIPLE TRUSSES AS REQ'D. DESIGNED FOR 10 PSF MIN BOT CHORD LIVE LOAD (NEED NOT BE COMBINED W/ ROOF LIVE LOAD).
7. " GT " INDICATES GIRDER TRUSS, PROVIDE MIN 2x6 BOT CHORD.
8. HANG TYP TRUSS FROM BM & GT W/ SIMPSON HUS26 UNO.
9. SHEATH ROOF PER STRUCTURAL NOTES.
10. PROVIDE STUDS BELOW EACH GT IN SAME COUNT AS GT PLYS, BUT NOT LESS THAN TWO STUDS, CARRY THROUGH ALL FLOORS TO FOUNDATION. PROVIDE SOLID BLK'G AS REQ'D BETWEEN FLOORS.
11. ALL TRUSSES SHALL BE DESIGNED TO ACCOUNT FOR CROSS GRAIN BEARING CAPACITY OF STUD WALL TOP PLATE, AS REQ'D. THE USE OF SIMPSON TBE SUPPORTS IS ACCEPTABLE, IF CAPACITIES ARE ADEQUATE.
12. USE (1) 2x6 TRIMMER STUD & (1) 2x6 KING STUD AT EXTERIOR HEADERS UNO.
13. SHEARWALLS & HOLDOWNS ORIGINATE @ FLOOR BELOW.

**CHANGES
MUST Be Approved Prior
To Performing Work**

A / S2.4 *UPPER ROOF FRAMING PLAN*

SCALE: 1/4"=1'-0"

PACIFIC NORTHWEST
STRUCTURAL GROUP, INC
A PROFESSIONAL ENGINEERING COMPANY
6193 NE MALBON CT.
KINGSTON, WA 98346
360.903.2803

RED BARN LANE - DUPLEX 1880/1620A
NW HOGAN LN & NELS NELSON RD NW
BREMERTON, WA 98311
UPPER ROOF FRAMING PLAN

DAVID L. STARR
STATE OF WASHINGTON
40303
REGISTERED
PROFESSIONAL ENGINEER

REVISIONS

DATE: 22-JUN-19
PROJECT NO: 19-002A

S2.3
6 OF 12 SHEETS

Established Basic Permit #
19-03671R2

Permit Number: 20-04896

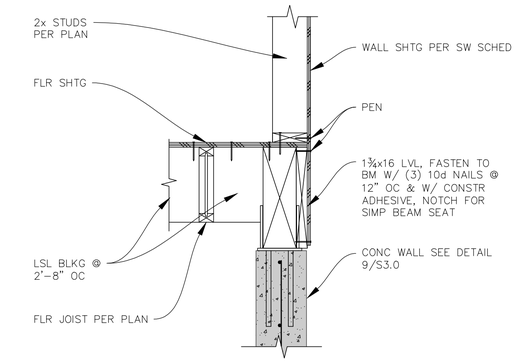

10 S3.0 DETAIL 1

SCALE: 1" = 1'-0"

NOTE:
SEE DETAILS 1/S3.0 FOR ADD'L INFO NOT SHOWN HERE.

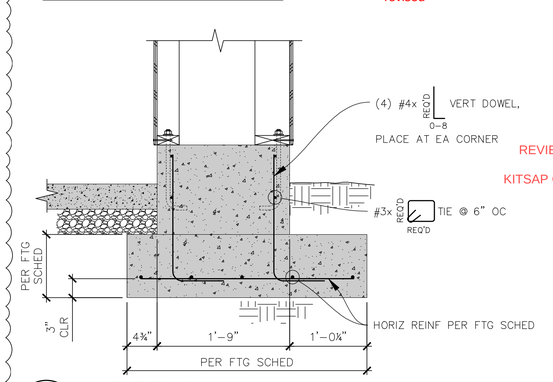

7 S3.0 DETAIL

SCALE: 1" = 1'-0"

revised

Reviewed for code compliance
with IRC 2015
Kitsap County Building Department
lasmith@co.kitsap.wa.us
11/16/2020

Subject To Field Inspection

CHANGES
MUST Be Approved Prior
To Performing Work

BASIC PERMIT PACKAGE
REVIEWED FOR CODE COMPLIANCE
WITH IRC 2015
KITSAP COUNTY BUILDING DEPARTMENT

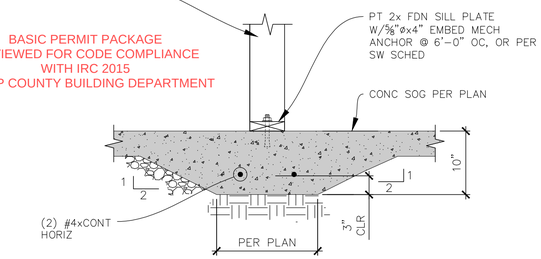

4 S3.0 DETAIL

SCALE: 1" = 1'-0"

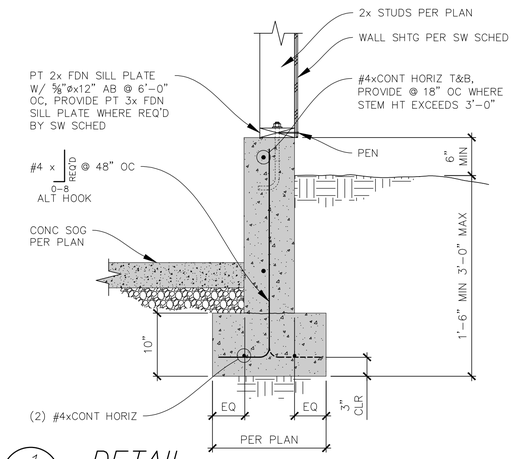

1 S3.0 DETAIL

SCALE: 1" = 1'-0"

NOTE:
SEE DETAILS 10/S3.0, 1/S3.1, 2/S3.1 & 10/S3.3 FOR ADD'L INFO NOT SHOWN HERE.

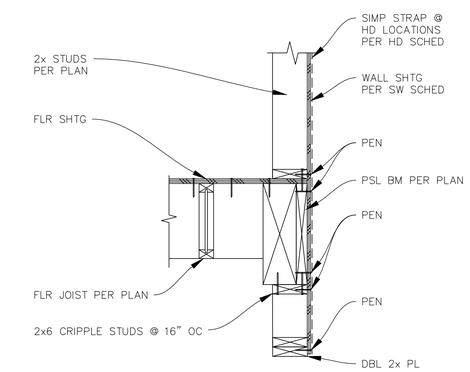

11 S3.0 DETAIL 1

SCALE: 1" = 1'-0"

NOTE:
SEE DETAILS 10/S3.0, 1/S3.1, 2/S3.1 & 10/S3.3 FOR ADD'L INFO NOT SHOWN HERE.

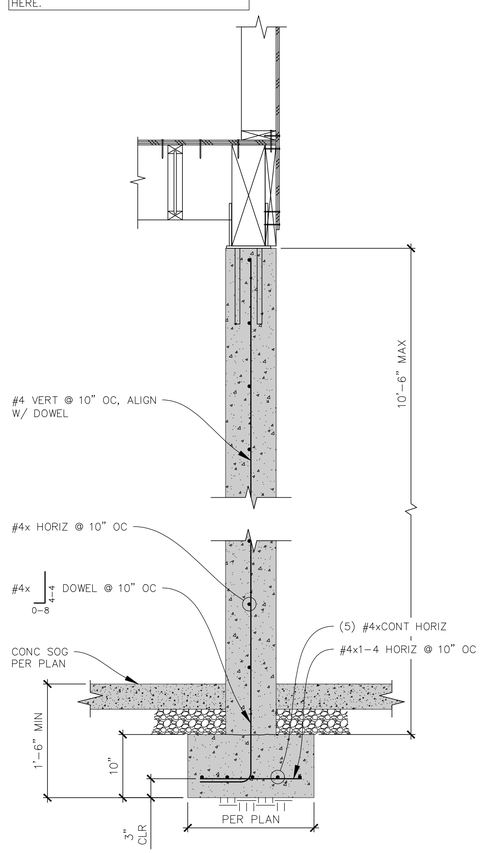

9 S3.0 DETAIL 1

SCALE: 1" = 1'-0"

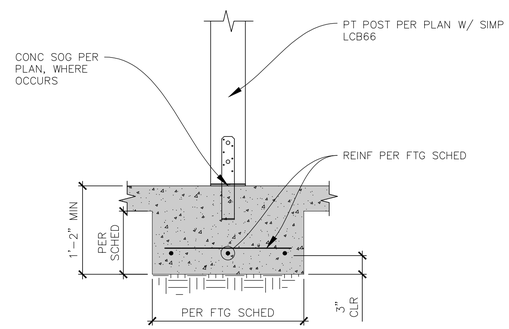

5 S3.0 DETAIL

SCALE: 1" = 1'-0"

NOTE:
SEE 1/S3.0 FOR ADD'L INFO NOT SHOWN HERE.

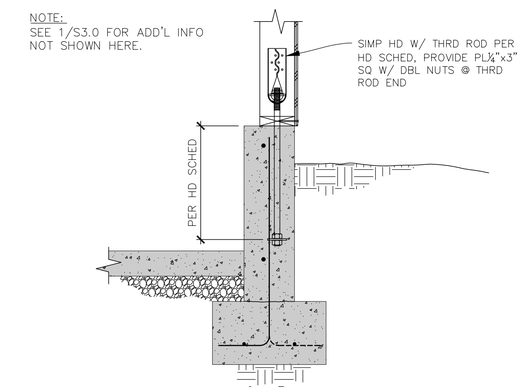

2 S3.0 DETAIL

SCALE: 1" = 1'-0"

NOTE:
SEE DETAILS 10/S3.2 & 11/S3.2 FOR ADD'L INFO NOT SHOWN HERE.

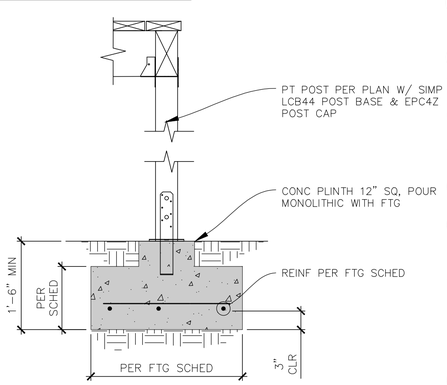

12 S3.0 DETAIL

SCALE: 1" = 1'-0"

NOTE:
1. ALTERNATE DETAIL WHERE SITE GRADING REQUIRES STEP.
2. SEE DETAILS 3/S3.0 FOR ADD'L INFO NOT SHOWN HERE.

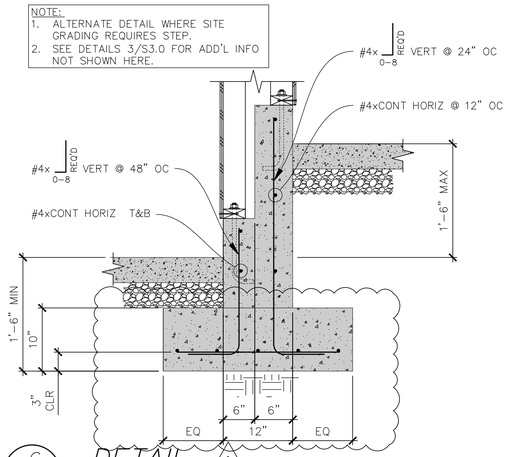

6 S3.0 DETAIL 1

SCALE: 1" = 1'-0"

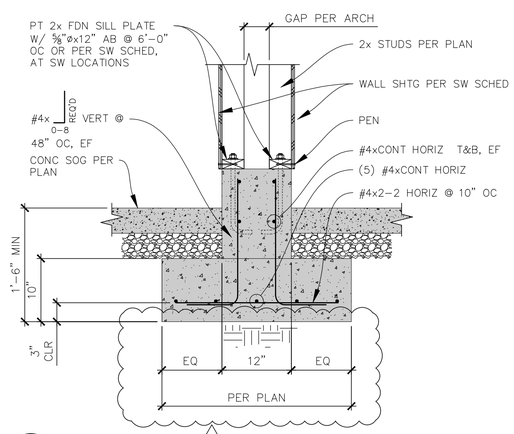

3 S3.0 DETAIL 1

SCALE: 1" = 1'-0"

PACIFIC NORTHWEST STRUCTURAL GROUP, INC
A PROFESSIONAL ENGINEERING COMPANY
6193 NE MALBON CT.
KINGSTON, WA 98346
360.903.2803

RED BARN LANE - DUPLEX 1880/1620A
NW HOGAN LN & NELS NELSON RD NW
BREMERTON, WA 98311
SECTIONS & DETAILS

DAVID L. STAHL
STATE OF WASHINGTON
40303
REGISTERED PROFESSIONAL ENGINEER

REVISIONS	
1	29-MAY-20

DATE: 22-JUN-19
PROJECT NO: 19-002A

S3.0

Established Basic Permit #
19-03671R2

Permit Number: 20-04896

revised

Reviewed for code compliance
with IRC 2015
Kitsap County Building Department
lasmith@co.kitsap.wa.us
11/16/2020

Subject To Field Inspection

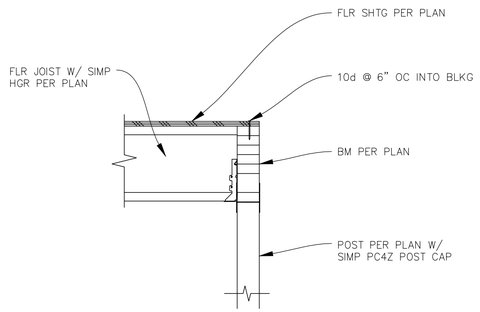

10 S3.1 DETAIL
SCALE: 1" = 1'-0"

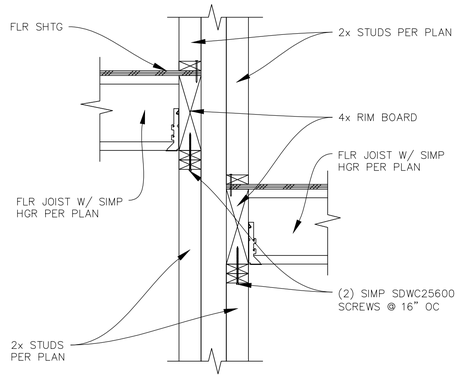

7 S3.1 DETAIL
SCALE: 1" = 1'-0"

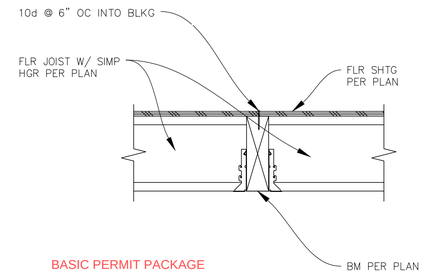

BASIC PERMIT PACKAGE
REVIEWED FOR CODE COMPLIANCE
WITH IRC 2015
KITSAP COUNTY BUILDING DEPARTMENT

4 S3.1 DETAIL
SCALE: 1" = 1'-0"

CHANGES
MUST Be Approved Prior
To Performing Work

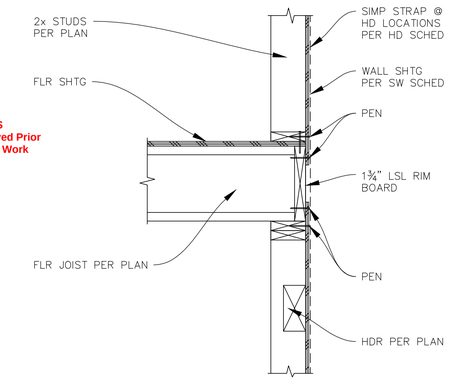

1 S3.1 DETAIL
SCALE: 1" = 1'-0"

NOTE:
SEE 9/S3.1 FOR ADD'L INFO NOT SHOWN HERE.

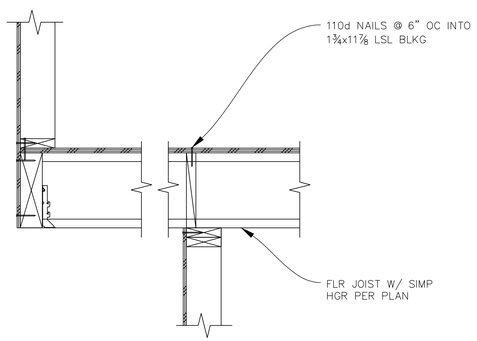

11 S3.1 DETAIL
SCALE: 1" = 1'-0"

NOTE:
SEE 7/S3.1 FOR ADD'L INFO NOT SHOWN HERE.

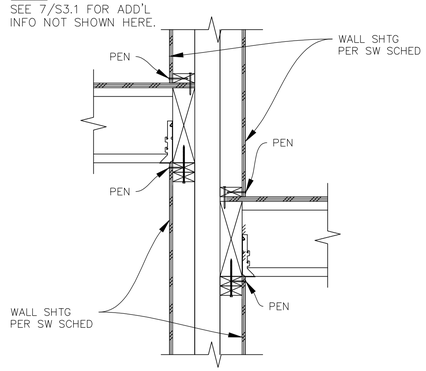

8 S3.1 DETAIL
SCALE: 1" = 1'-0"

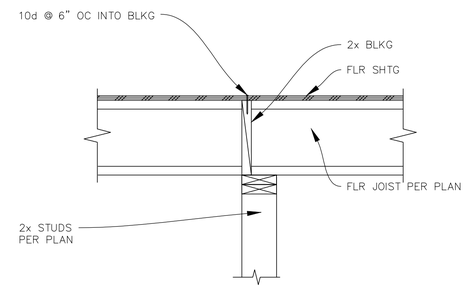

5 S3.1 DETAIL
SCALE: 1" = 1'-0"

NOTE:
SEE 1/S3.1 FOR ADD'L INFO NOT SHOWN HERE.

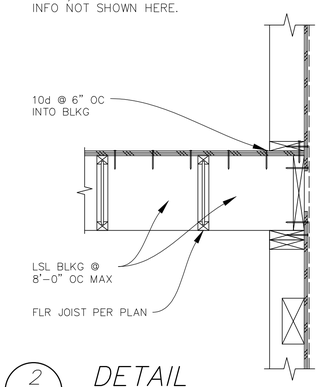

2 S3.1 DETAIL
SCALE: 1" = 1'-0"

NOTE:
SEE 1/S3.1 FOR ADD'L INFO NOT SHOWN HERE.

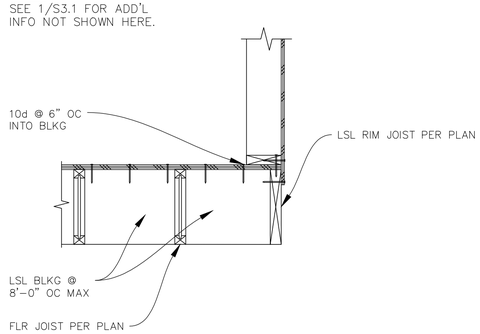

12 S3.1 DETAIL
SCALE: 1" = 1'-0"

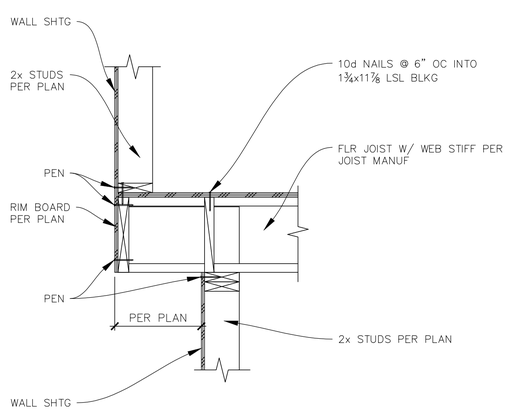

9 S3.1 DETAIL
SCALE: 1" = 1'-0"

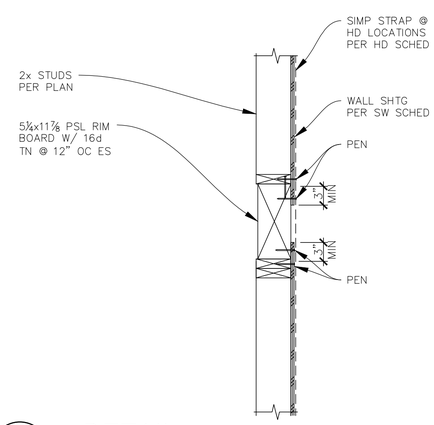

6 S3.1 DETAIL
SCALE: 1" = 1'-0"

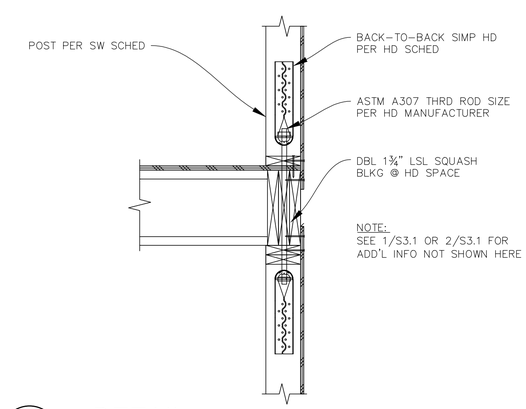

3 S3.1 DETAIL
SCALE: 1" = 1'-0"

PACIFIC NORTHWEST STRUCTURAL GROUP, INC
A PROFESSIONAL ENGINEERING COMPANY
6193 NE MALBON CT.
KINGSTON, WA 98346
360.903.2803

RED BARN LANE - DUPLEX 1880/1620A
NW HOGAN LN & NELS NELSON RD NW
BREMERTON, WA 98311
SECTIONS & DETAILS

DAVID L. STARR
STATE OF WASHINGTON
40303
REGISTERED
PROFESSIONAL ENGINEER

REVISIONS

DATE: 22-JUN-19
PROJECT NO: 19-002A

S3.1
9 OF 12 SHEETS

Established Basic Permit #
19-03671R2

Permit Number: 20-04896

BASIC PERMIT PACKAGE
REVIEWED FOR CODE COMPLIANCE
WITH IRC 2015
KITSAP COUNTY BUILDING DEPARTMENT
revised
Subject To Field Inspection
Reviewed for code compliance
with IRC 2015
Kitsap County Building Department
lasmith@co.kitsap.wa.us
11/16/2020
CHANGES
MUST Be Approved Prior
To Performing Work

NOTE:
1. SEE 2/S3.1 FOR ADD'L INFO NOT SHOWN HERE.
2. FLASHING DESIGNED BY OTHERS

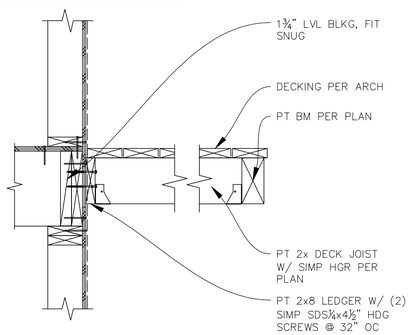

10 / S3.2 DETAIL
SCALE: 1" = 1'-0"

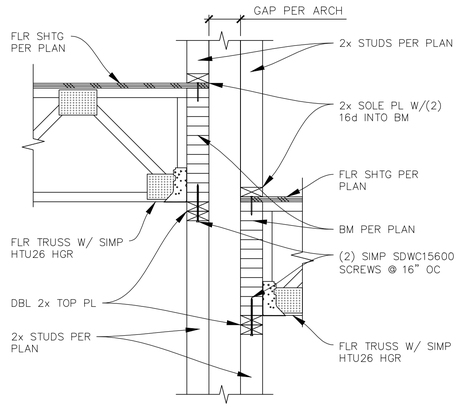

7 / S3.2 DETAIL
SCALE: 1" = 1'-0"

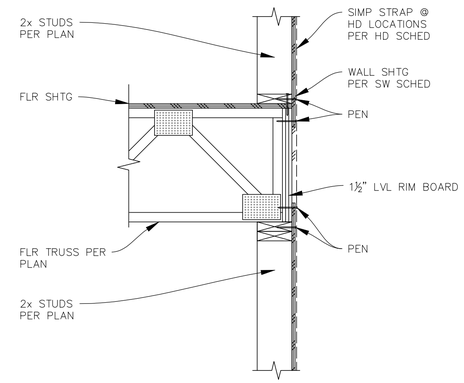

4 / S3.2 DETAIL
SCALE: 1" = 1'-0"

NOTE:
SEE 11/S3.0 & 9/S3.1 FOR ADD'L INFO NOT SHOWN HERE.

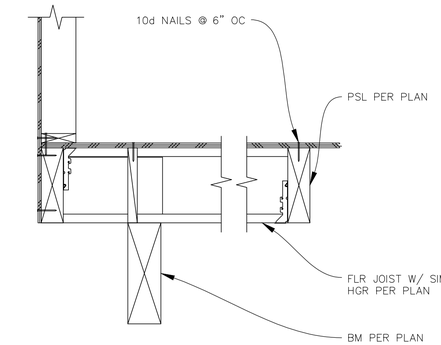

1 / S3.2 DETAIL
SCALE: 1" = 1'-0"

NOTE:
1. SEE DETAIL 12/S3.0 FOR ADD'L INFO NOT SHOWN HERE.
2. FLASHING DESIGNED BY OTHERS

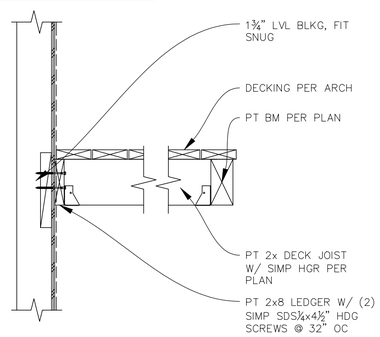

11 / S3.2 DETAIL
SCALE: 1" = 1'-0"

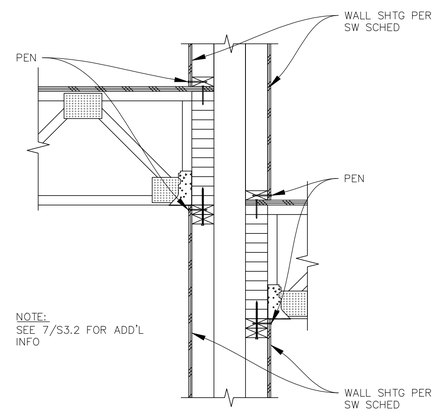

8 / S3.2 DETAIL
SCALE: 1" = 1'-0"

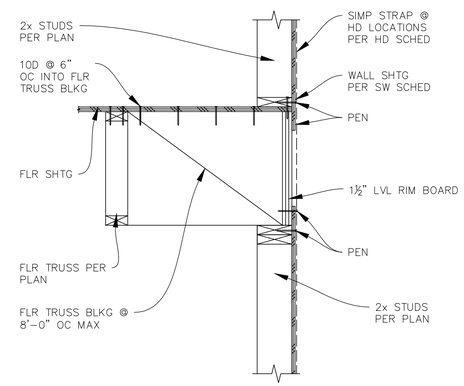

5 / S3.2 DETAIL
SCALE: 1" = 1'-0"

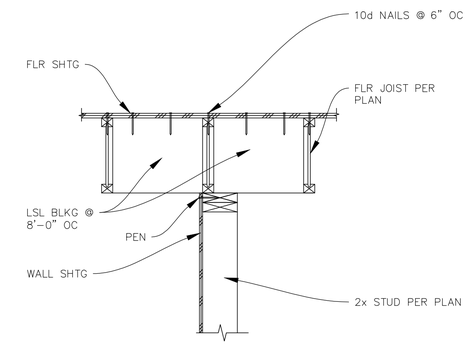

2 / S3.2 DETAIL
SCALE: 1" = 1'-0"

NOTE:
1. SEE 2/S3.1 FOR ADD'L INFO NOT SHOWN HERE.
2. FLASHING DESIGNED BY OTHERS

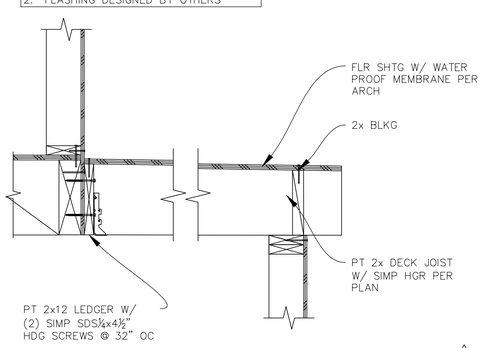

12 / S3.2 DETAIL
SCALE: 1" = 1'-0"

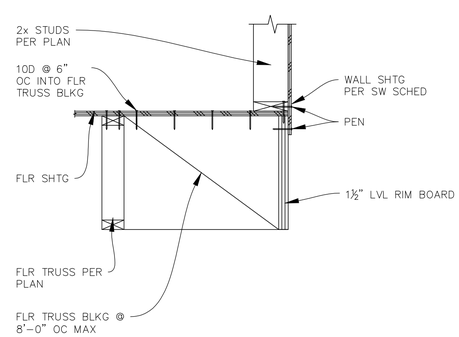

9 / S3.2 DETAIL
SCALE: 1" = 1'-0"

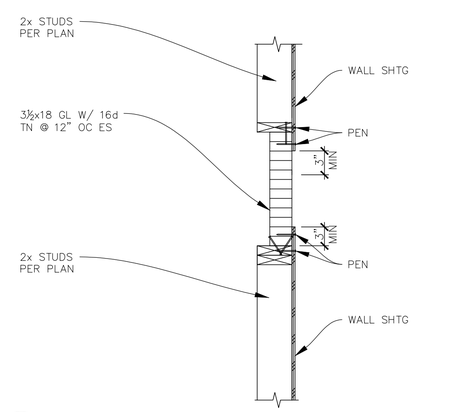

6 / S3.2 DETAIL
SCALE: 1" = 1'-0"

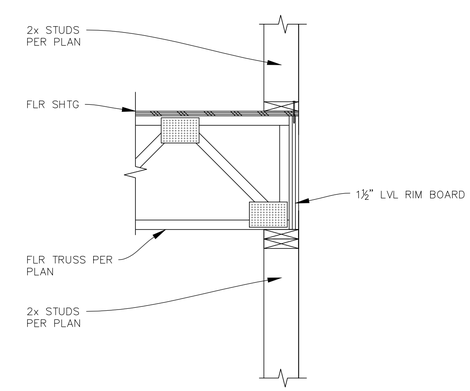

3 / S3.2 DETAIL
SCALE: 1" = 1'-0"

PACIFIC NORTHWEST STRUCTURAL GROUP, INC
A PROFESSIONAL ENGINEERING COMPANY
6193 NE MALBON CT.
KINGSTON, WA 98346
360.903.2803

RED BARN LANE - DUPLEX 1880/1620A
NW HOGAN LN & NELS NELSON RD NW
BREMERTON, WA 98311
SECTIONS & DETAILS

STATE OF WASHINGTON
DAVID L. STARKEL
40303
REGISTERED PROFESSIONAL ENGINEER

REVISIONS	
1	03-DEC-19
2	29-MAY-20

DATE: 22-JUN-19
PROJECT NO: 19-002A

S3.2
11 OF 12 SHEETS

Established Basic Permit #
19-03671R2
Permit Number: 20-04896

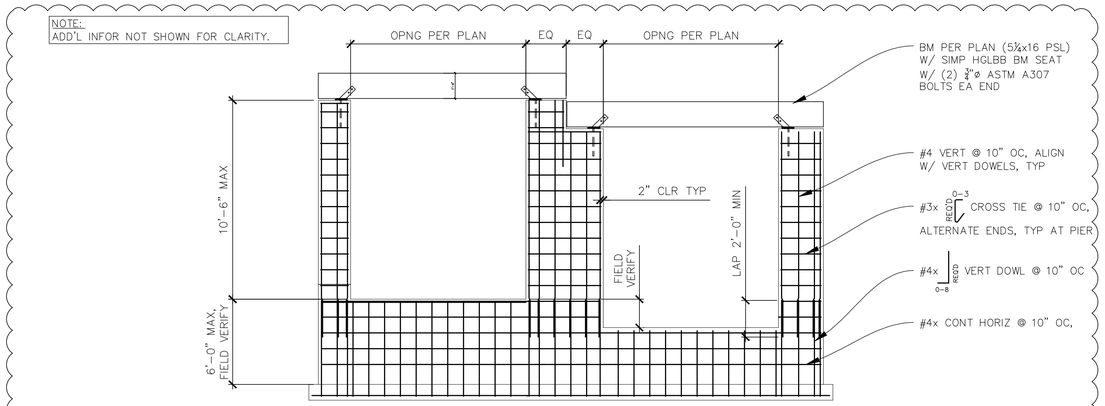

10 S3.3 STRUCTURAL ELEVATION 1

SCALE: 1/4" = 1'-0"

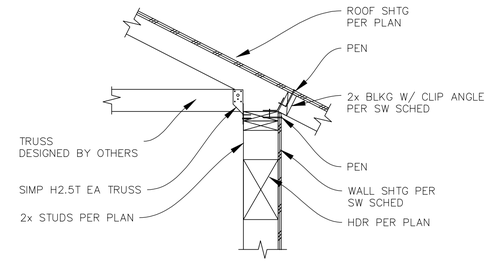

4 S3.3 DETAIL

SCALE: 1" = 1'-0"

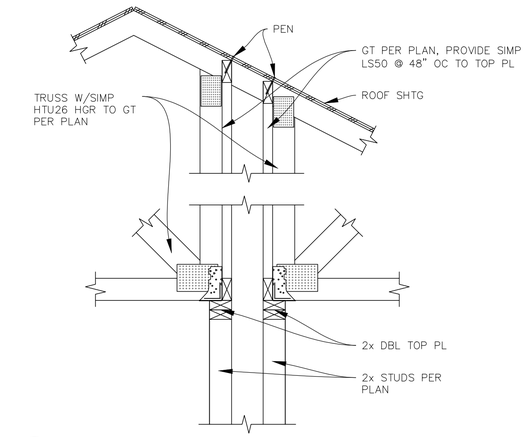

1 S3.3 DETAIL

SCALE: 1" = 1'-0"

Subject To Field Inspection

CHANGES MUST Be Approved Prior To Performing Work

revised

BASIC PERMIT PACKAGE
REVIEWED FOR CODE COMPLIANCE
WITH IRC 2015
KITSAP COUNTY BUILDING DEPARTMENT

Reviewed for code compliance with IRC 2015
Kitsap County Building Department
lasmith@co.kitsap.wa.us
11/16/2020

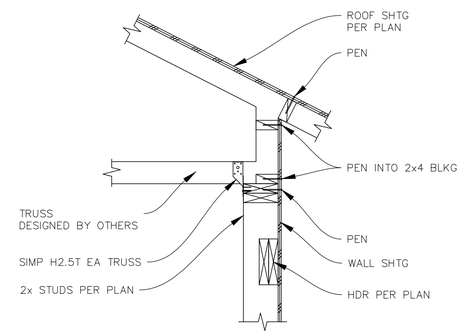

5 S3.3 DETAIL

SCALE: 1" = 1'-0"

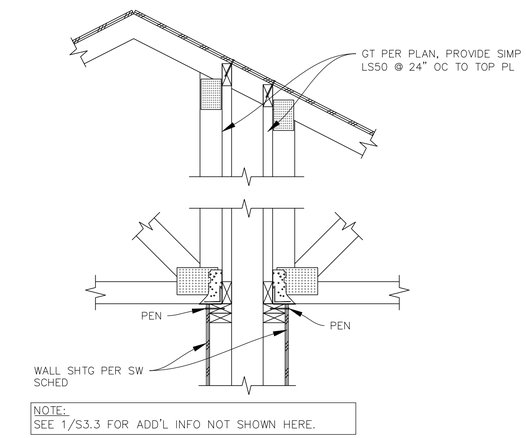

2 S3.3 DETAIL

SCALE: 1" = 1'-0"

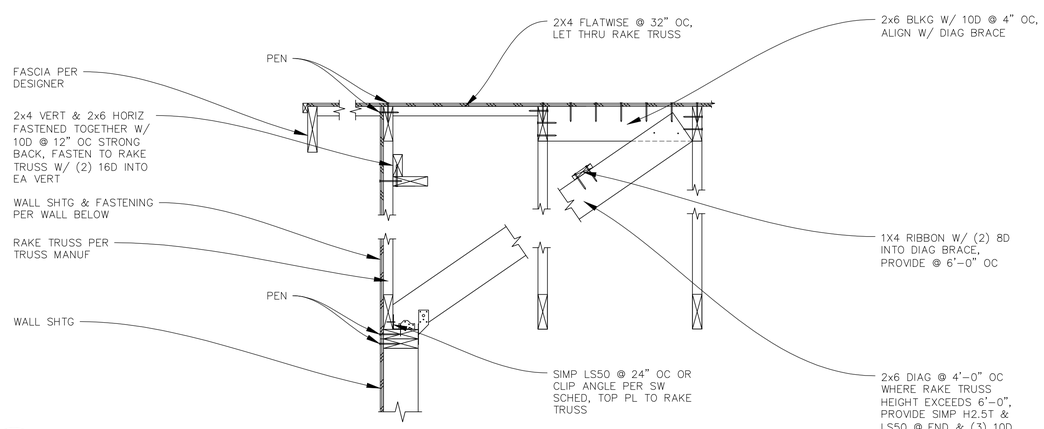

9 S3.3 DETAIL

SCALE: 1" = 1'-0"

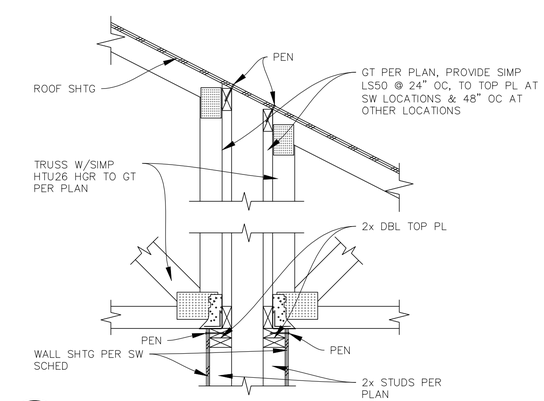

3 S3.3 DETAIL

SCALE: 1" = 1'-0"

PACIFIC NORTHWEST STRUCTURAL GROUP, INC
A PROFESSIONAL ENGINEERING COMPANY
6193 NE MALBON CT.
KINGSTON, WA 98346
360.903.2803

RED BARN LANE - DUPLEX 1880/1620A
NW HOGAN LN & NELS NELSON RD NW
BREMERTON, WA 98311
SECTIONS & DETAILS

DAVID L. STARKEL
STATE OF WASHINGTON
40303
REGISTERED
PROFESSIONAL ENGINEER

REVISIONS

DATE: 22-JUN-19
PROJECT NO: 19-002A

S3.3

12 OF 12 SHEETS

Established Basic Permit #
19-03671R2

Permit Number: 20-04896

revised

BASIC PERMIT PACKAGE
REVIEWED FOR CODE COMPLIANCE
WITH IRC 2015
KITSAP COUNTY BUILDING DEPARTMENT

Subject To Field Inspection

CHANGES
MUST Be Approved Prior
To Performing Work

Reviewed for code compliance
with IRC 2015
Kitsap County Building Department
lasmith@co.kitsap.wa.us
11/16/2020

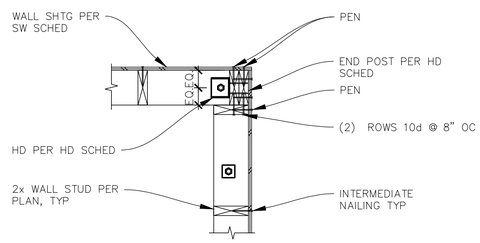

7 S3.4 DETAIL

SCALE: 1" = 1'-0"

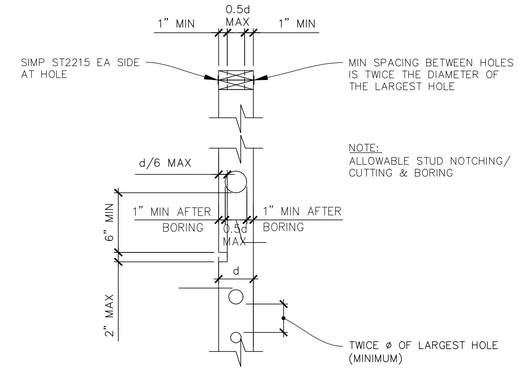

4 S3.4 ALLOWABLE STUD NOTCHING/ CUTTING & BORING

SCALE: 1" = 1'-0"

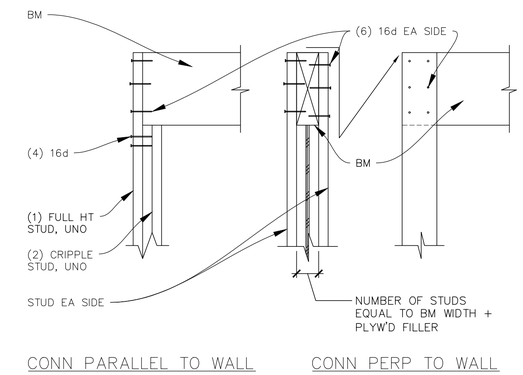

1 S3.4 TYP BM POCKET CONN

SCALE: 1" = 1'-0"

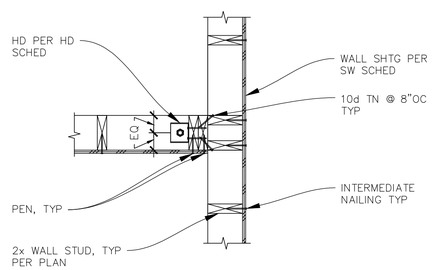

8 S3.4 DETAIL

SCALE: 1" = 1'-0"

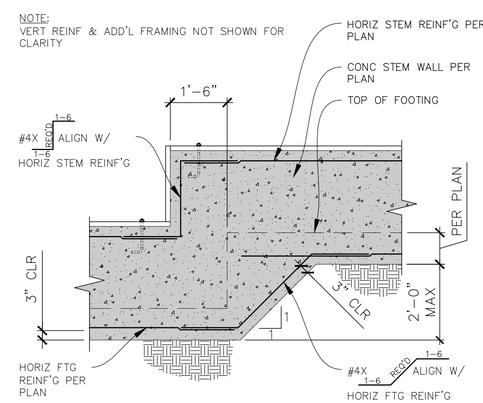

5 S3.4 TYPICAL STEPPED FTG

SCALE: 1/2" = 1'-0"

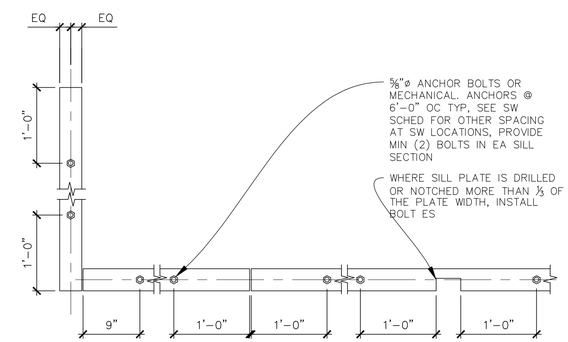

2 S3.4 TYPICAL ANCHOR BOLT LAYOUT & SILL NOTCHING

SCALE: 1" = 1'-0"

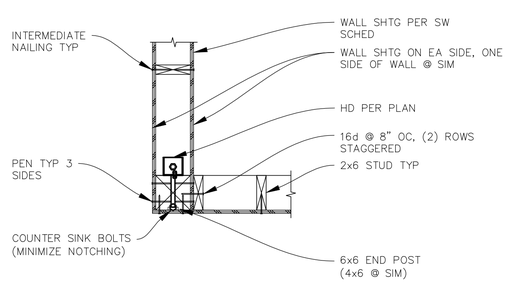

9 S3.4 DETAIL

SCALE: 1" = 1'-0"

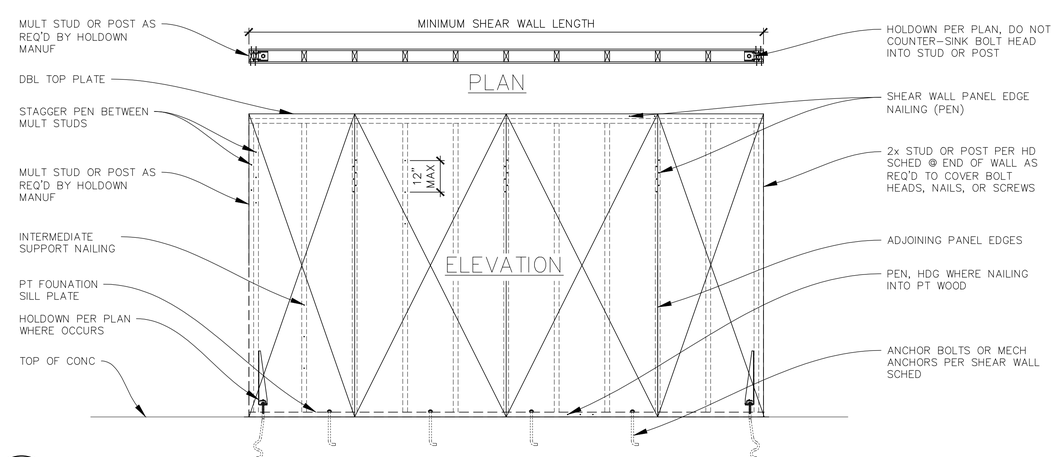

6 S3.4 TYPICAL SHEARWALL CONSTRUCTION

SCALE: 1/2" = 1'-0"

PACIFIC NORTHWEST STRUCTURAL GROUP, INC
A PROFESSIONAL ENGINEERING COMPANY
6193 NE MALBON CT.
KINGSTON, WA 98346
360.903.2803

RED BARN LANE - DUPLEX 1880/1620A
NW HOGAN LN & NELS NELSON RD NW
BREMERTON, WA 98311
TYPICAL SECTIONS & DETAILS

DAVID L. STARR
STATE OF WASHINGTON
40303
REGISTERED
PROFESSIONAL ENGINEER

REVISIONS

DATE: 22-JUN-19
PROJECT NO: 19-002A

S3.4
13 OF 12 SHEETS

Established Basic Permit #
19-03671R2

Permit Number: 20-04896